YAMAHA

PARTS CATALOGUE

YFM45FGW (1D9V) U.S.A.
YFM45FAW (1D9W) CANADA
YFM45FGW (1D9X) EUROPE

1F1D9-100EK

(2F1D9-100EK)

YAMAHA GENUINE Parts & Accessories

2012/9/26

NEWS NO.	DATE	COMMENT
PE0-MC-070098	DEC.,6,2007	FIG.52:ENBLEM & LABEL 2 LIST / ILLUSTRATION REVISION
PE0-MC-090014	Mar.,3,2009	FIG.27:FRONT DIFFRENTIAL ILLUSTRATION CORRECTION
PE0-MC-120070	Sep.,4,2012	COR:FIG.11 EXHAUST LIST/ILLUST. CORRECTION

YFM45FGW/YFM45FAW
PARTS CATALOGUE
©2007 by Yamaha Motor Co., Ltd.
1st edition, January 2007
All rights reserved.
Any reprinting or unauthorized use
without the written permission of
Yamaha Motor Co., Ltd.
is expressly prohibited.

A3

FOREWORD

This Parts Catalogue is related to the parts for the model(s) on the cover page. When you are ordering replacement parts, please refer to this Parts Catalogue and quote both part numbers and part names correctly.

1. Modifications or additions which have been made after the issue of the Parts Catalogue will be announced in the Parts News.
   It is advisable that you make the necessary corrections to the Parts Catalogue according to the Parts News.

2. Abbreviations
   The following abbreviations are used in this Parts Catalogue.

   “UR” Use specified parts number.
   “UN” Use as many as needed.
   “AP” Alternate Parts
   “LM” Locally Made (Parts need to be ordered locally)
   “F#” Frame No. (Applicable machine No.)
   “O/S” Over Size

3. The number of components for assembly
   - Parts, which are to be supplied in an assembly, are listed with a dot (.) in front of the part name as shown below.
   - The numeral appearing to the right of each component part indicates the quantity of parts for each assembly unit.

PART NO.	DESCRIPTION	Q’TY	REMARKS
2F5–83310–60	FRONT FLASHER LIGHT ASSY	2	
115–83311–60	.BULB (6V–18W)	1	

4. Applicable colours of graphics are represented in the “REMARKS” as shown below.

PART NO.	DESCRIPTION	Q’TY	REMARKS
2N4–24110–00–X5	FUEL TANK COMP.	2	MXR
3J1–24240–10	.GRAPHIC, FUEL TANK	1	FOR MXR

5. Note that the illustrations for reference in finding parts numbers are not to be used for assembling. When assembling, please use the applicable service manual.

6. The asterisk (*) before a reference number indicates modified items after the first edition.

7. Applicable Serial No.

Engine Serial No.

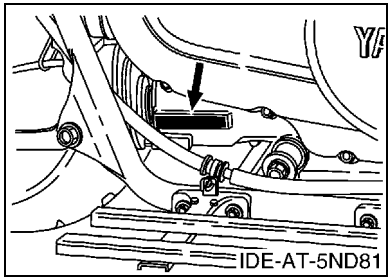

Frame Serial No.

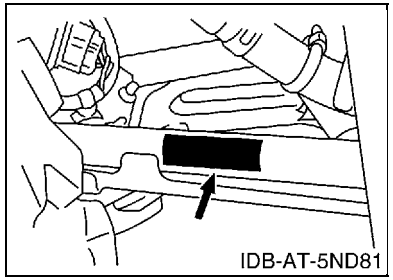

8. Applicable Colour Code (The (*) mark shows Model colour.)

Abbreviation	Colour Name	Colour Code
SL(*)	SILVER	0035

9. Quantity Column Information

Column No.	Name Of Q'ty Column	Destination
1	USA	U.S.A.
2	CAN	CANADA
3	EUR	EUROPE

MODEL LABEL

(1) A label called “Model Label” is affixed in the location as indicated in (3) below. When using this parts catalogue, please be sure to cross–reference the “model code – production code No.” in the catalogue with the “model code – production code No.” indicated on the Model Label affixed onto the product concerned.

(2) “Model Label” Indication

a b ○ xxxx – xxx ● x c	a: Model Type Code b: Production Code No. c: Colouring Type

○ 4TW1–010 ● A

(3) Model Label Affixing Location

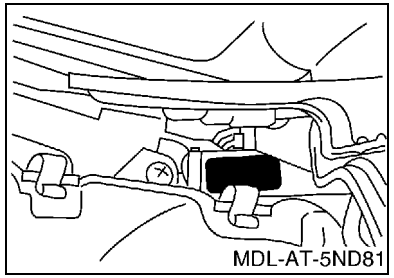

(4) Colouring Information

Model Code	Colouring Type Code	Colour Code	Colour Name	Abbreviation
1D9V	N	0035	SILVER	SL
1D9W	N	0035	SILVER	SL
1D9X	N	0035	SILVER	SL

(5) Model Code – Production Code Number of Model Listed in This Parts Catalogue

Model Code	Production Code No.	Country (destination)
1D9V	010	U.S.A.
1D9W	010	CANADA
1D9X	010	EUROPE

CONTENTS

ENGINE

CYLINDER HEAD B2
CYLINDER B3
CRANKSHAFT & PISTON B4
VALVE B5
CAMSHAFT & CHAIN B6
WATER PUMP B7
RADIATOR & HOSE B8
OIL PUMP B9
INTAKE B10
CARBURETOR B11
EXHAUST B13
CRANKCASE B14
CRANKCASE COVER 1 ..... C2
STARTER C4
STARTER CLUTCH C5
CLUTCH C6
TRANSMISSION C8
MIDDLE DRIVE GEAR C10
SHIFT CAM & FORK C12
SHIFT SHAFT C13

CHASSIS

FRAME C15
FRONT FENDER D4
REAR FENDER D5
SIDE COVER D6
REAR ARM D7
DRIVE SHAFT D8
FRONT DIFFERENTIAL D11
REAR SUSPENSION D14
FRONT SUSPENSION & WHEEL D15
STEERING E2
FUEL TANK E3
SEAT E4
FRONT WHEEL E5
FRONT BRAKE CALIPER E8
REAR WHEEL E9
REAR BRAKE CALIPER E11
STEERING HANDLE & CABLE E12
FRONT MASTER CYLINDER E13
STAND & FOOTREST E14
REAR MASTER CYLINDER E15
GUARD F3
GENERATOR F4
STARTING MOTOR F5
METER F6
HEADLIGHT F7
TAILLIGHT F8
TAILLIGHT 2 ..... F9
HANDLE SWITCH & LEVER F10
ELECTRICAL 1 ..... F11
ELECTRICAL 2 ..... F14
EMBLEM & LABEL 1 ..... F15
EMBLEM & LABEL 2 ..... G2
EMBLEM & LABEL 3 ..... G3

INDEX

NUMERICAL INDEX M1

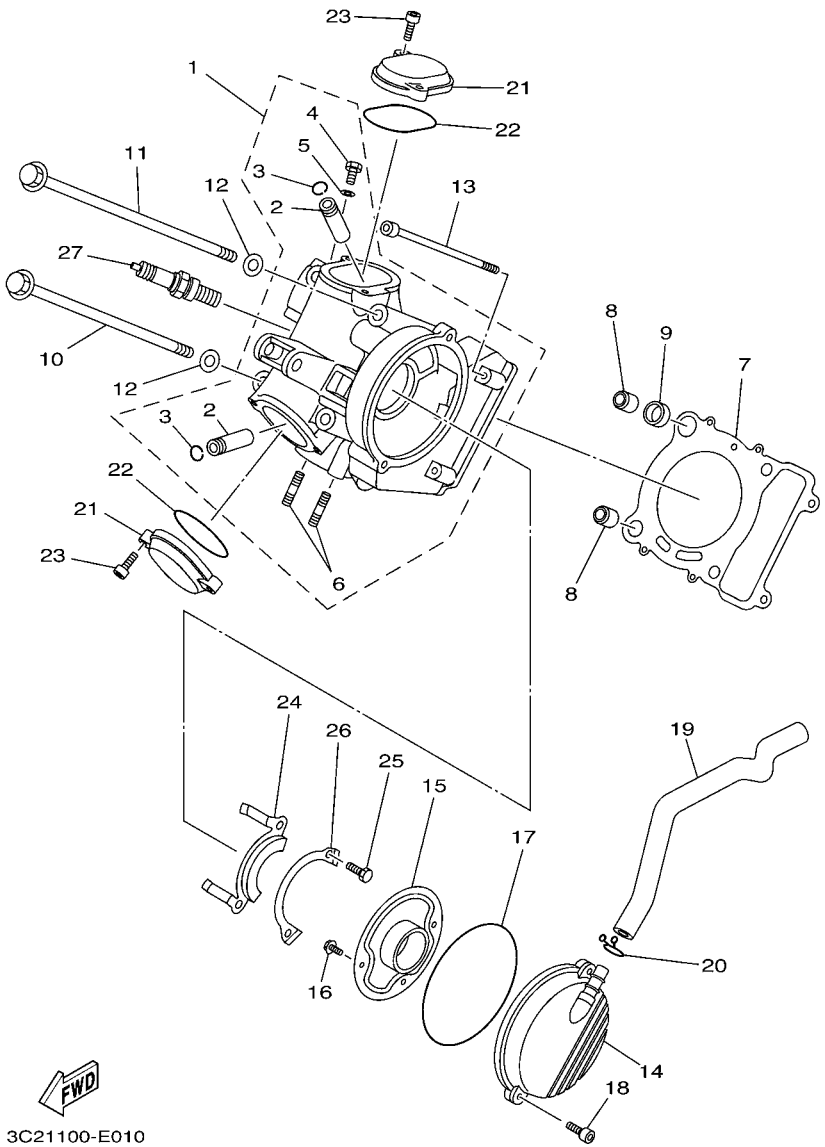

FIG. 1 CYLINDER HEAD

REF. NO.	PART NO.	DESCRIPTION	USA	CAN	EUR			REMARKS
1	5GH–11110–00	CYLINDER HEAD ASSY	1	1	1			
2	3Y1–11133–11	.GUIDE, VALVE 1	2	2	2			
3	93440–12052	.CIRCLIP	2	2	2			
4	90401–06001	.BOLT, UNION	1	1	1			
5	90430–06192	.GASKET	1	1	1			
6	95617–08620	.BOLT, STUD	2	2	2			
7	5GH–11181–00	GASKET, CYLINDER HEAD 1	1	1	1			
8	99530–14016	PIN, DOWEL	2	2	2			
9	90430–14240	GASKET	1	1	1			
10	90105–10421	BOLT, FLANGE	2	2	2			
11	90105–10422	BOLT, FLANGE	2	2	2			
12	90201–10128	WASHER, PLATE	4	4	4			
13	91317–06140	BOLT	2	2	2			
14	4WU–11160–01	BREATHER ASSY	1	1	1			
15	4KB–11165–00	PLATE, BREATHER	1	1	1			
16	95022–06012	BOLT, FLANGE	2	2	2			
17	93211–06635	O-RING	1	1	1			
18	91317–06025	BOLT	2	2	2			
19	3C2–E1166–00	PIPE, BREATHER 1	1	1	1			
20	90467–140A4	CLIP	1	1	1			
21	2NL–11186–12	COVER, CYLINDER HEAD SIDE 2	2	2	2			
22	93210–57634	O-RING	2	2	2			
23	91317–06020	BOLT	4	4	4			
24	5GH–1111F–00	PLATE	1	1	1			
25	97017–06012	BOLT	2	2	2			
26	90215–06003	WASHER, LOCK	1	1	1			
27	94701–00333	PLUG, SPARK (NGK DR8EA)	1	1	1			

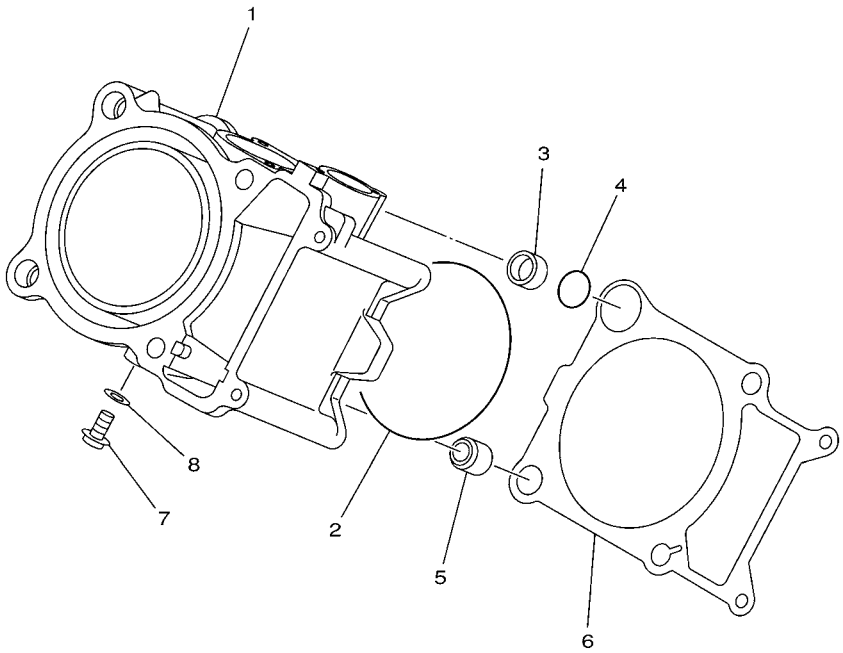

5GH1110-0020

FIG. 2 CYLINDER

REF. NO.	PART NO.	DESCRIPTION	USA	CAN	EUR			REMARKS
1	5ND–11310–00	CYLINDER	1	1	1			
2	93210–89447	O-RING	1	1	1			
3	90387–16547	COLLAR	1	1	1			
4	93210–18322	O-RING	1	1	1			
5	99530–14016	PIN, DOWEL	1	1	1			
6	5GH–11351–00	GASKET, CYLINDER	1	1	1			
7	90153–06029	SCREW, HEXAGON	1	1	1			
8	90430–06014	GASKET	1	1	1			

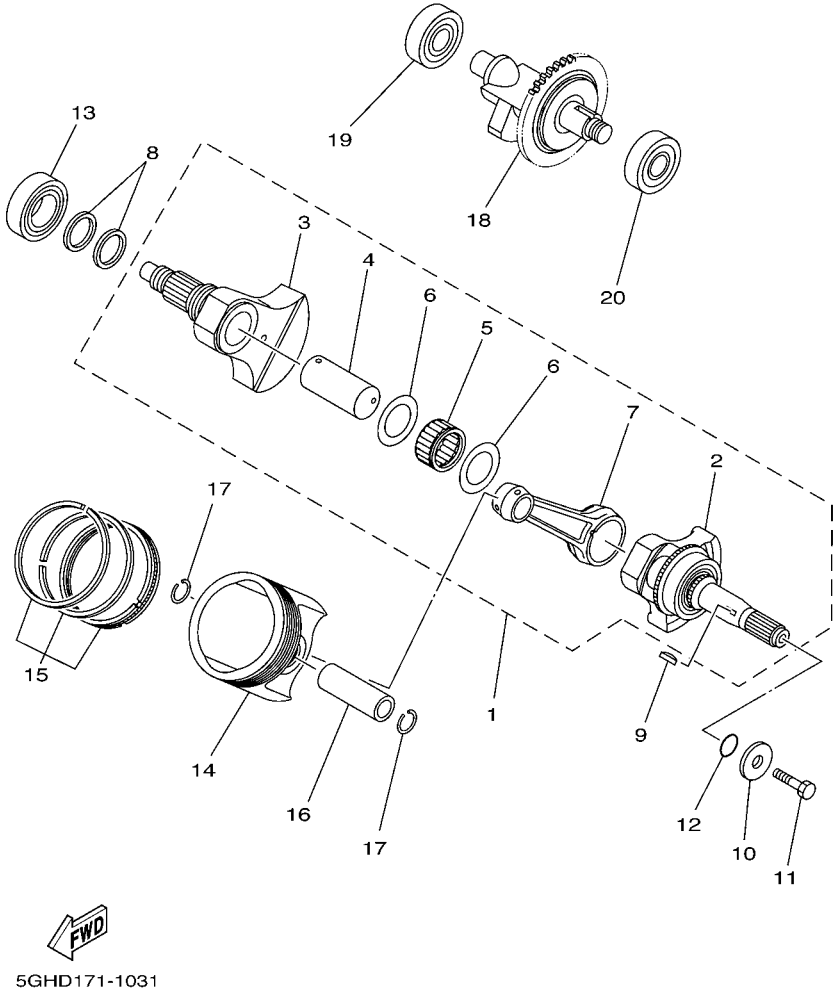

FIG. 3 CRANKSHAFT & PISTON

REF. NO.	PART NO.	DESCRIPTION	USA	CAN	EUR			REMARKS
1	5ND–11400–00	CRANKSHAFT ASSY	1	1	1			
2	5ND–W1141–00	.CRANK 1	1	1	1			
3	5ND–W1142–00	.CRANK 2	1	1	1			
4	5GH–11681–00	.PIN, CRANK 1	1	1	1			
5	93310–635D4	.BEARING	1	1	1			
6	90201–356K1	.WASHER, PLATE	2	2	2			
7	5GH–11651–01	.ROD, CONNECTING	1	1	1			
8	5GH–11447–00	SEAL, CRANK	2	2	2			
9	90280–05048	KEY, WOODRUFF	1	1	1			
10	90201–10321	WASHER, PLATE	1	1	1			
11	90101–10568	BOLT	1	1	1			
12	93210–16290	O-RING	1	1	1			
13	93306–30629	BEARING	1	1	1			
14	5ND–11631–00	PISTON (STD)	1	1	1			
	5ND–11636–00	PISTON (0.50MM O/S)	1	1	1			AP
	5ND–11638–00	PISTON (1.00MM O/S)	1	1	1			AP
15	5ND–11603–00	PISTON RING SET (STD)	1	1	1			
	5ND–11605–00	PISTON RING SET (0.50MM O/S)	1	1	1			AP
	5ND–11607–00	PISTON RING SET (1.00MM O/S)	1	1	1			AP
16	3LD–11633–00	PIN, PISTON	1	1	1			
17	93450–22027	CIRCLIP	2	2	2			
18	5ND–11500–00	BALANCER ASSY	1	1	1			
19	93306–30315	BEARING	1	1	1			
20	93306–30438	BEARING	1	1	1			

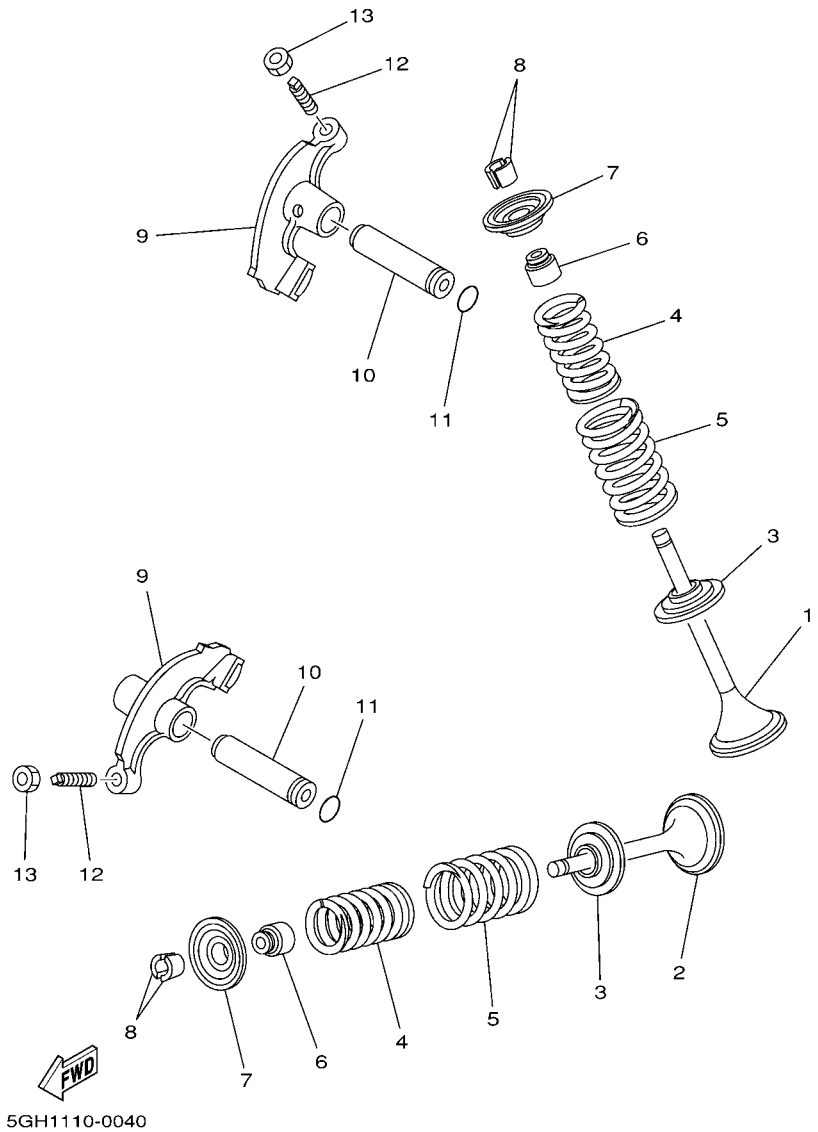

FIG. 4 VALVE

REF. NO.	PART NO.	DESCRIPTION	USA	CAN	EUR			REMARKS
1	5GH–12111–00	VALVE, INTAKE	1	1	1			
2	5GH–12121–00	VALVE, EXHAUST	1	1	1			
3	3Y1–12116–00	SEAT, VALVE SPRING	2	2	2			
4	22U–12113–00	SPRING, VALVE INNER	2	2	2			
5	1UY–12114–01	SPRING, VALVE OUTER	2	2	2			
6	M01–12129–00	SEAL, VALVE STEM	2	2	2			
7	3Y1–12117–01	RETAINER, VALVE SPRING	2	2	2			
8	1J7–12118–00	COTTER, VALVE	4	4	4			
9	3GD–12151–00	ARM, VALVE ROCKER	2	2	2			
10	3Y1–12156–00	SHAFT, ROCKER 2	2	2	2			
11	93210–09165	O-RING	2	2	2			
12	31G–12159–02	SCREW, VALVE ADJUSTING	2	2	2			
13	31G–12158–00	NUT, LOCK	2	2	2			

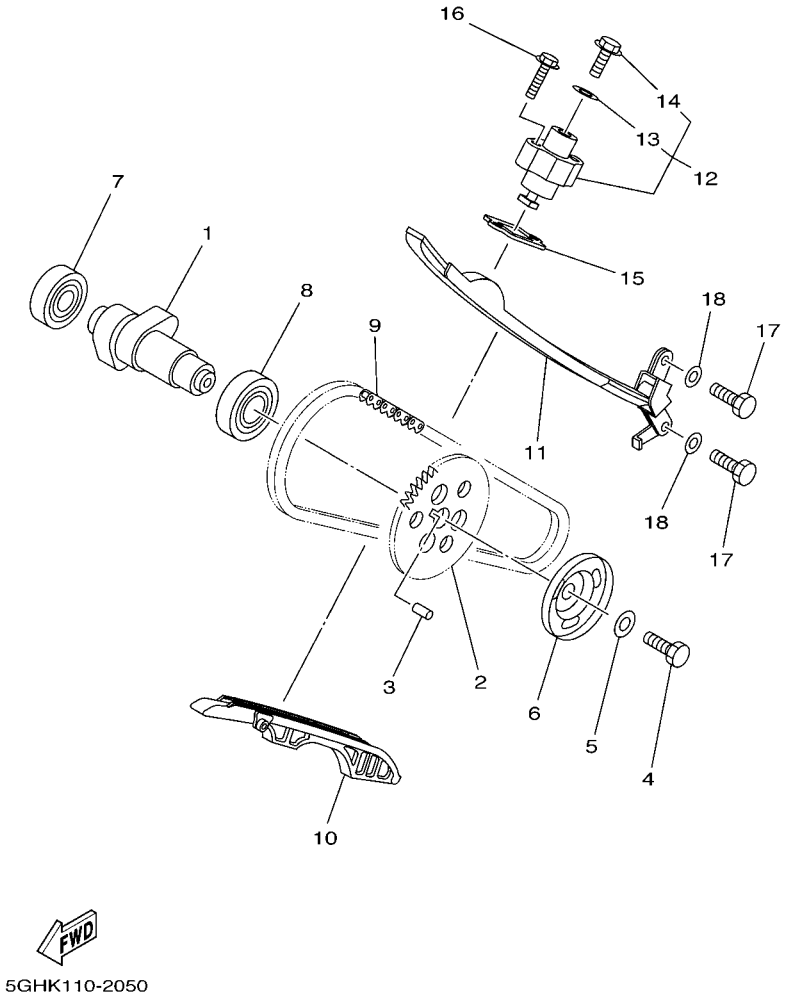

FIG. 5 CAMSHAFT & CHAIN

REF. NO.	PART NO.	DESCRIPTION	USA	CAN	EUR			REMARKS
1	5GH–12171–00	CAMSHAFT 1	1	1	1			
2	5GH–12176–10	SPROCKET, CAM CHAIN	1	1	1			
3	93604–10011	PIN, DOWEL	1	1	1			
4	90101–10303	BOLT	1	1	1			
5	90201–10591	WASHER, PLATE	1	1	1			
6	4KB–11145–00	PLATE, BREATHER 2	1	1	1			
7	93306–00438	BEARING	1	1	1			NIHONSEIKO
8	93306–00515	BEARING	1	1	1			
9	94582–20116	CHAIN (DID SCR-0409 SV 116LE)	1	1	1			
10	5GH–12231–10	GUIDE, STOPPER 1	1	1	1			
11	5GH–12241–00	GUIDE, STOPPER 2	1	1	1			
12	31G–12210–01	TENSIONER ASSY, CAM CHAIN	1	1	1			
13	31G–12214–00	.GASKET	1	1	1			
14	31G–12222–00	.PLUG	1	1	1			
15	3GD–12213–00	GASKET, TENSIONER CASE	1	1	1			
16	95027–06025	BOLT, FLANGE	2	2	2			
17	97027–06016	BOLT	2	2	2			
18	92907–06600	WASHER, PLATE	2	2	2			

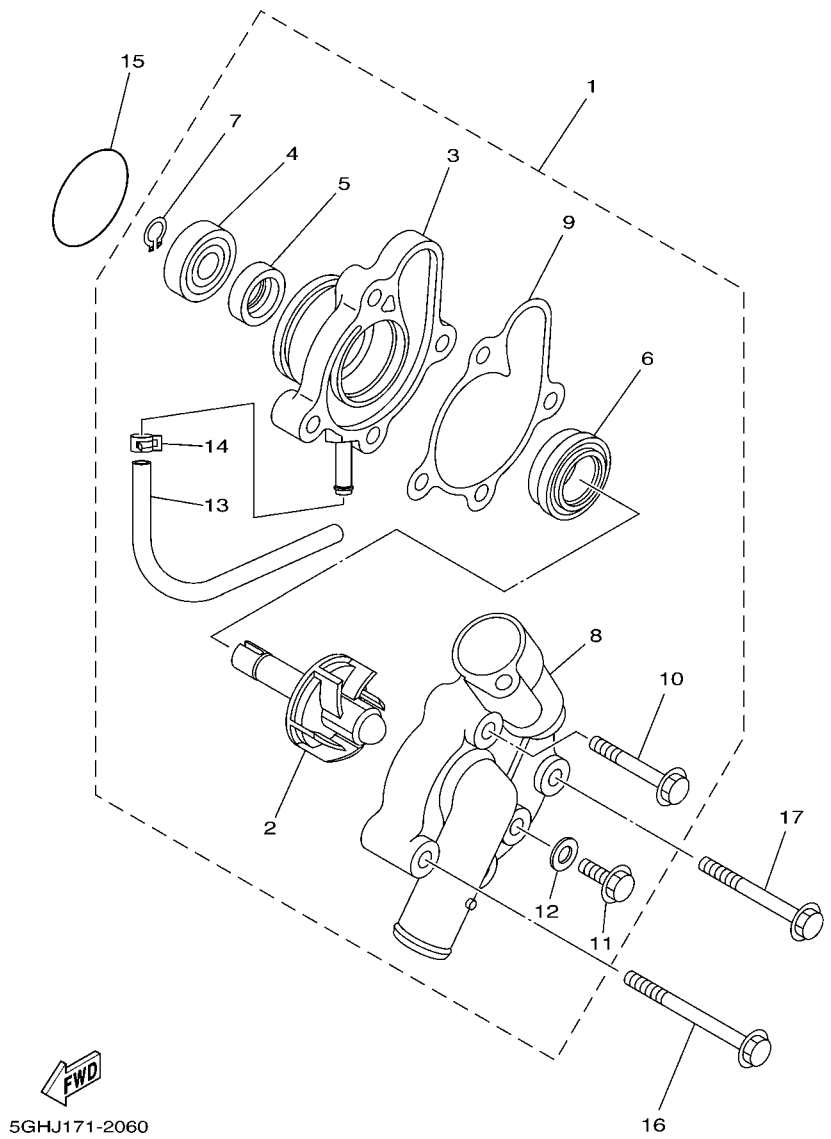

FIG. 6 WATER PUMP

REF. NO.	PART NO.	DESCRIPTION	USA	CAN	EUR			REMARKS
1	5GH–12420–01	WATER PUMP ASSY	1	1	1			
2	5CG–12450–00	.IMPELLER SHAFT ASSY	1	1	1			
3	5GH–12421–01	.HOUSING, WATER PUMP	1	1	1			
4	93306–00006	.BEARING	1	1	1			
5	93101–10090	.OIL SEAL	1	1	1			
6	11H–12438–10	.SEAL, MECHANICAL	1	1	1			
7	99009–10400	.CIRCLIP	1	1	1			
8	5GH–12422–00	.COVER, HOUSING	1	1	1			
9	5GH–12428–00	.GASKET, HOUSING COVER 2	1	1	1			
10	90105–06086	.BOLT, FLANGE	2	2	2			
11	95022–06012	.BOLT, FLANGE	1	1	1			
12	90430–06014	.GASKET	1	1	1			
13	90446–06001	.HOSE (L300)	1	1	1			
14	90467–06194	.CLIP	1	1	1			
15	93210–33133	O-RING	1	1	1			
16	95027–06060	BOLT, FLANGE	1	1	1			
17	95027–06050	BOLT, FLANGE	1	1	1			

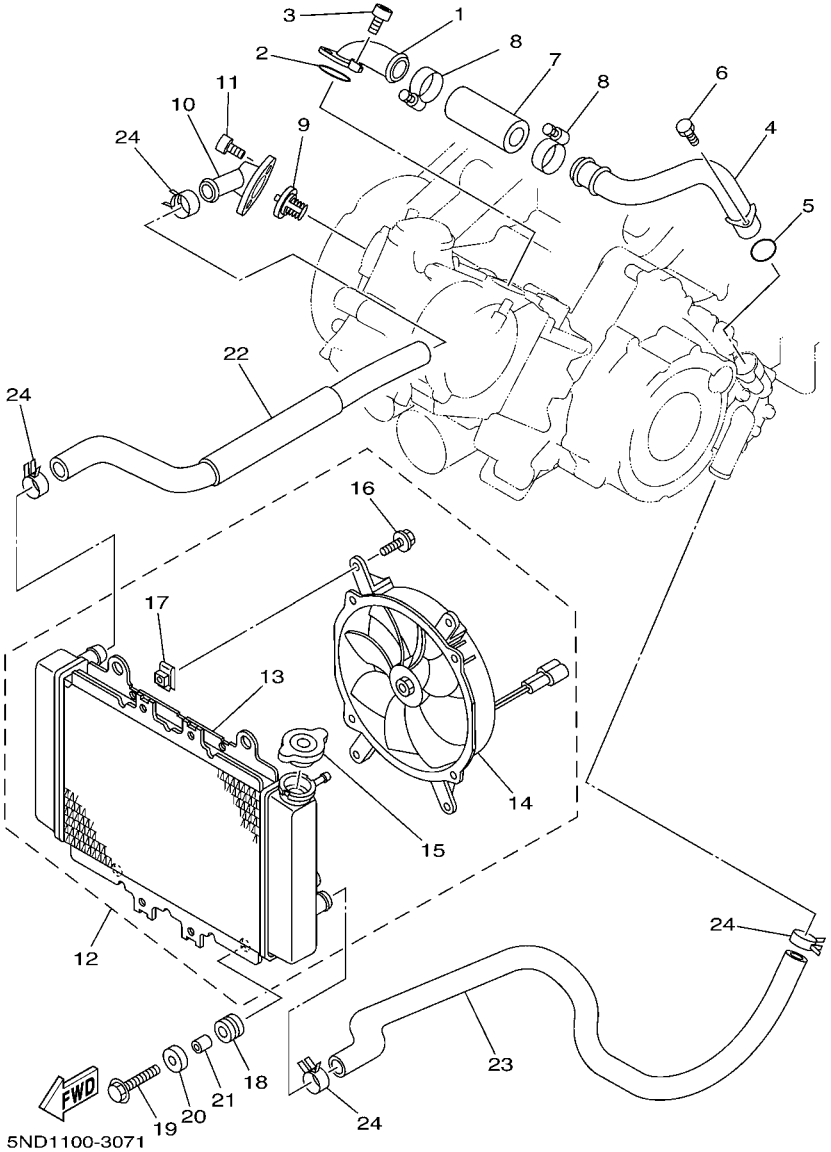

FIG. 7 RADIATOR & HOSE

REF. NO.	PART NO.	DESCRIPTION	USA	CAN	EUR			REMARKS
1	5GH–12446–00	JOINT	1	1	1			
2	93210–33786	O-RING	1	1	1			
3	90110–06136	BOLT, HEXAGON SOCKET HEAD	2	2	2			
4	5GH–12484–00	PIPE 4	1	1	1			
5	93210–18417	O-RING	1	1	1			
6	91317–06012	BOLT	1	1	1			
7	5GH–12481–00	PIPE 1	1	1	1			
8	90450–32015	HOSE CLAMP ASSY	2	2	2			
9	2TV–12411–00	THERMOSTAT	1	1	1			
10	5GH–12413–00	COVER, THERMOSTAT	1	1	1			
11	91317–06020	BOLT	2	2	2			
12	5ND–E2460–01	RADIATOR ASSY	1	1	1			
13	5ND–E240A–01	.RADIATOR ASSY	1	1	1			
14	5ND–E2405–01	.BLOWER ASSY	1	1	1			
15	5ND–E2462–00	.CAP, RADIATOR	1	1	1			
16	5ND–E2675–00	.BOLT, BLOWER HOLDING	4	4	4			
17	5ND–E2535–00	.PLATE	4	4	4			
18	90480–15235	GROMMET	4	4	4			
19	95807–06020	BOLT, FLANGE	2	2	2			
20	90209–06174	WASHER	2	2	2			
21	90387–060A7	COLLAR	2	2	2			
22	5ND–E2482–00	PIPE 2	1	1	1			
23	5ND–E2483–00	PIPE 3	1	1	1			
24	90467–25800	CLIP	4	4	4			

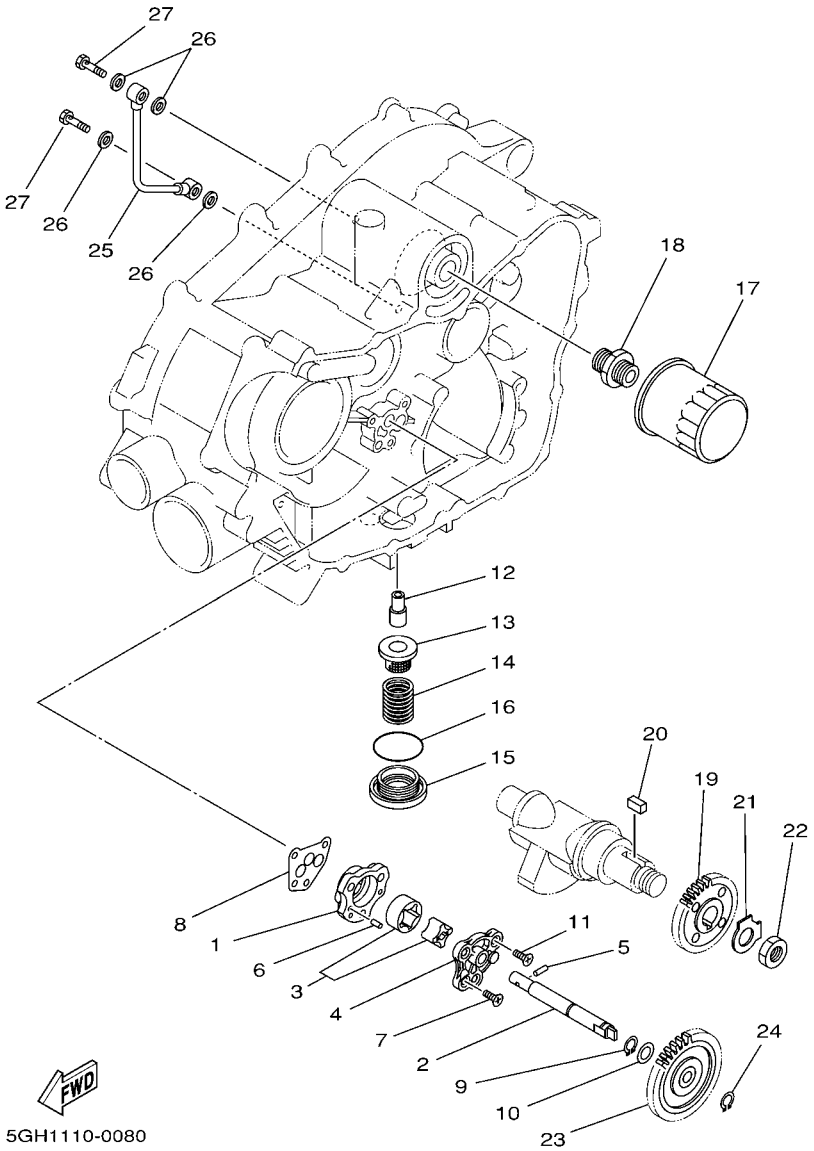

FIG. 8 OIL PUMP

REF. NO.	PART NO.	DESCRIPTION	USA	CAN	EUR			REMARKS
1	1UY–13336–00	HOUSING, ROTOR	1	1	1			
2	5GH–13314–00	SHAFT, PUMP	1	1	1			
3	3Y1–13310–01	ROTOR ASSY 1	1	1	1			
4	1UY–13316–00	COVER, PUMP	1	1	1			
5	93603–12030	PIN, DOWEL	1	1	1			
6	93603–07073	PIN, DOWEL	2	2	2			
7	98702–06020	SCREW, FLAT HEAD	1	1	1			
8	3GD–13329–00	GASKET, PUMP COVER	1	1	1			
9	99009–11400	CIRCLIP	1	1	1			
10	90201–114P2	WASHER, PLATE (1.0)	1	1	1			
11	98707–06030	SCREW, FLAT HEAD	3	3	3			
12	2XK–13416–00	PIPE, OIL 1	1	1	1			
13	51Y–13411–00	STRAINER, OIL	1	1	1			
14	90501–18576	SPRING, COMPRESSION	1	1	1			
15	4HC–15351–00	PLUG, DRAIN	1	1	1			
16	93210–35520	O-RING	1	1	1			
17	5GH–13440–20	ELEMENT ASSY, OIL CLEANER	1	1	1			
18	90401–20145	BOLT, UNION	1	1	1			
19	5GH–13324–00	GEAR, PUMP DRIVE	1	1	1			
20	90282–05013	KEY, STRAIGHT	1	1	1			
21	90215–14205	WASHER, LOCK	1	1	1			
22	90170–14284	NUT	1	1	1			
23	5GH–13325–00	GEAR, PUMP DRIVEN	1	1	1			
24	99009–11400	CIRCLIP	1	1	1			
25	4KB–13161–01	PIPE, DELIVERY 1	1	1	1			
26	90430–08119	GASKET	4	4	4			
27	90401–08038	BOLT, UNION	2	2	2			

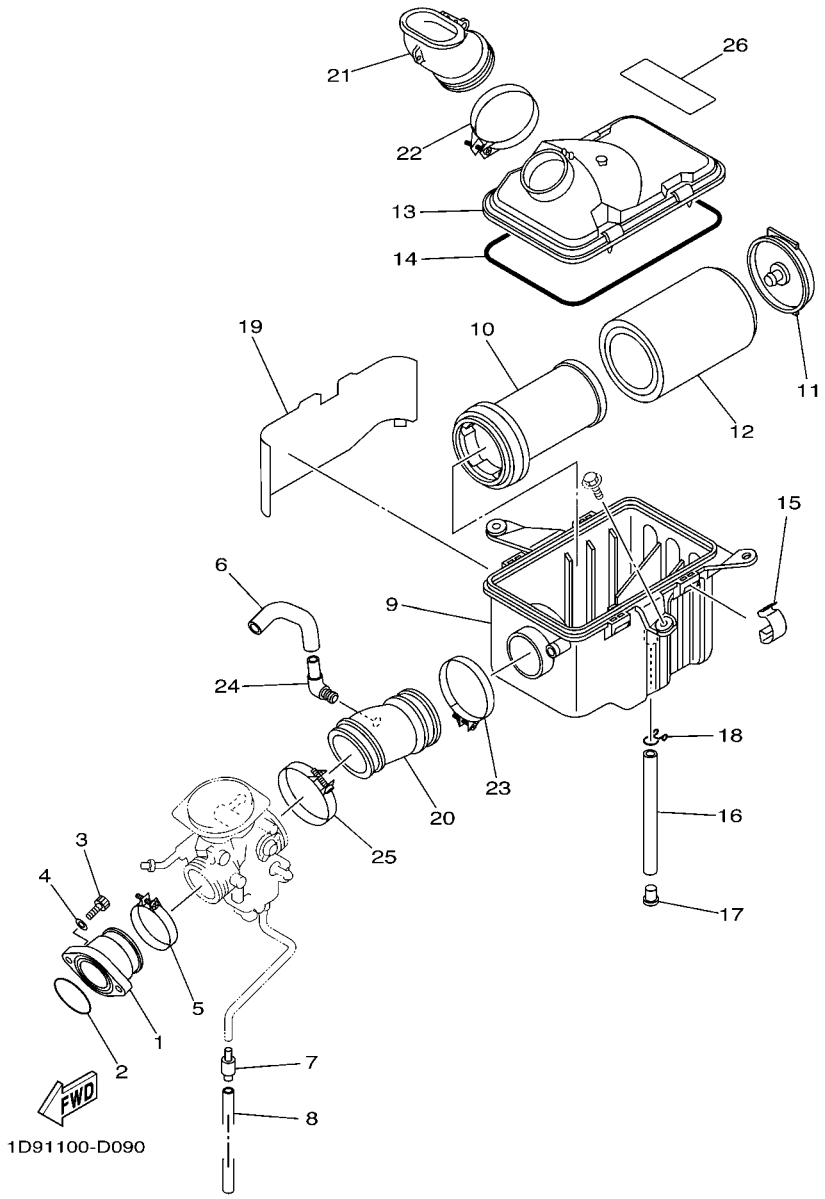

FIG. 9 INTAKE

REF. NO.	PART NO.	DESCRIPTION	USA	CAN	EUR			REMARKS
1	5GH–13586–00	JOINT, CARBURETOR 1	1	1	1			
2	93210–44545	O-RING	1	1	1			
3	91317–08025	BOLT	2	2	2			
4	90201–08085	WASHER, PLATE	2	2	2			
5	90450–47001	HOSE CLAMP ASSY	1	1	1			
6	5ND–E4349–00	PIPE	1	1	1			
7	24W–14193–00	PIPE	1	1	1			
8	91A20–07010	TUBE, FLEXIBLE VINYL	1	1	1			
9	5UH–E4411–00	CASE, AIR CLEANER 1	1	1	1			
10	5UH–E4458–00	GUIDE	1	1	1			
11	5UH–E4468–00	PLATE,ELEMENT FITTING	1	1	1			
12	5UH–E4451–10	ELEMENT, AIR CLEANER	1	1	1			
13	5UH–E4412–00	CAP, CLEANER CASE 1	1	1	1			
14	5UH–E4462–00	SEAL	1	1	1			
15	5UH–E4424–00	CLIP, CAP FITTING	4	4	4			
16	5UH–E4769–10	PIPE, DRAIN	1	1	1			
17	5UH–E4191–00	PLUG, DRAIN	1	1	1			
18	5UH–E4438–00	CLIP, DRAIN CLEANER	1	1	1			
19	5ND–E442F–00	PROTECTOR	1	1	1			
20	5ND–E4453–00	JOINT, AIR CLEANER 1	1	1	1			
21	5ND–E4437–02	DUCT	1	1	1			
22	90450–58002	HOSE CLAMP ASSY	1	1	1			
23	90450–58002	HOSE CLAMP ASSY	1	1	1			
24	31A–14419–00	PIPE	1	1	1			
25	90450–56006	HOSE CLAMP ASSY	1	1	1			
26	1D9–2177C–10	PLATE, EPA OFFROAD ATV 1	1					

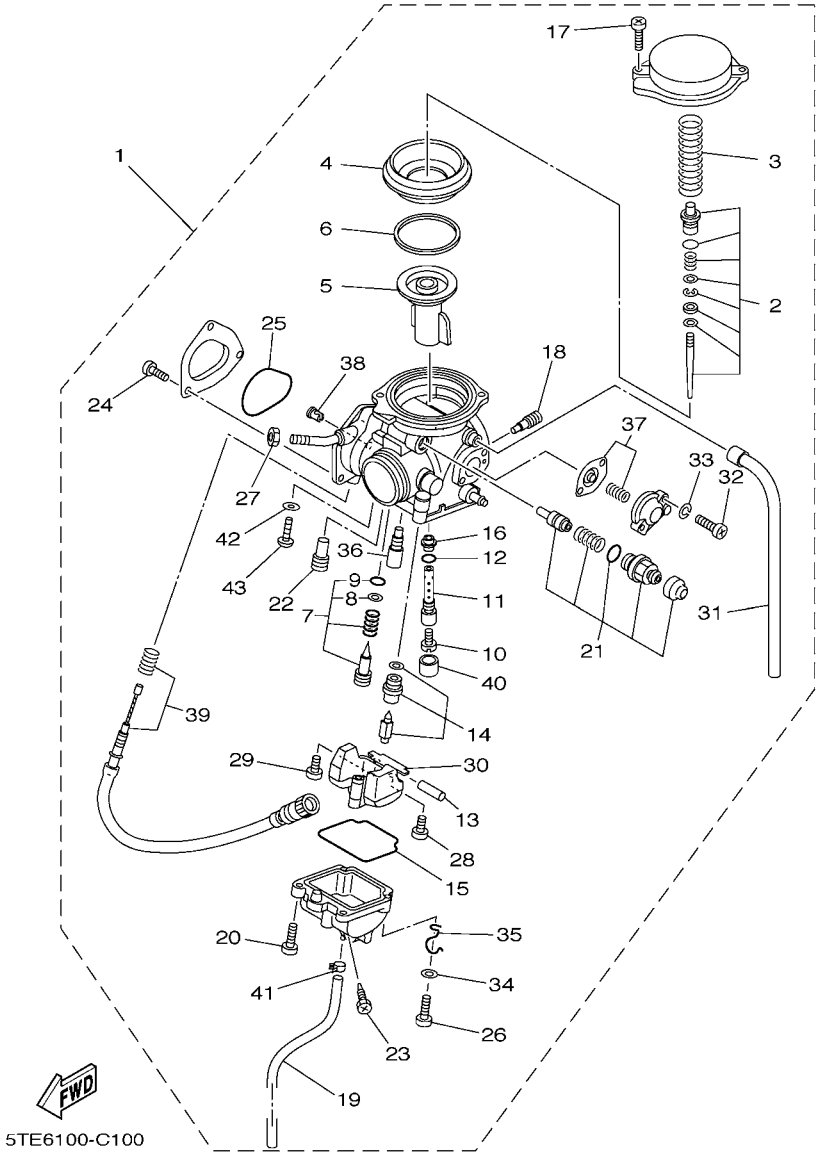

FIG. 10 CARBURETOR

REF. NO.	PART NO.	DESCRIPTION	USA	CAN	EUR			REMARKS
1	5ND–E4101–11	CARBURETOR ASSY 1	1	1				
	5ND–E4101–00	CARBURETOR ASSY 1			1			
2	5ND–1490J–10	.NEEDLE SET	1	1				
	5ND–1490J–00	.NEEDLE SET			1			
3	5DM–14933–00	.SPRING, DIAPHRAGM	1	1	1			
4	5GH–14940–10	.DIAPHRAGM ASSY	1	1	1			
5	5DM–14112–00	.VALVE, THROTTLE 1	1	1	1			
6	5GH–14918–10	.RING	1	1	1			
7	5ND–14105–00	.PILOT SCREW SET	1	1				
	5GH–14105–10	.PILOT SCREW SET			1			WHITE SPRING
8	3H1–14962–00	..WASHER	1	1	1			
9	3H1–14147–00	..O-RING	1	1	1			
10	3G2–1423E–52	.JET, MAIN (#131.3)	1	1	1			
11	5GH–14261–00	.HOLDER	1	1	1			
12	583–14561–00	.O-RING	1	1	1			
13	127–14186–00	.PIN, FLOAT	1	1	1			
14	5UH–14107–20	.NEEDLE VALVE SET	1	1				
	4SV–14107–20	.NEEDLE VALVE SET			1			
15	5DM–14561–00	.O-RING	1	1	1			
16	5DM–14141–40	.NOZZLE, MAIN	1	1	1			
17	4KM–14216–00	.SCREW	2	2	2			
18	1HX–14231–16	.JET, MAIN (# 80)	1	1	1			
19	4KB–14193–20	.PIPE	1	1	1			
20	98580–04010	.SCREW, PAN HEAD	3	3	3			
21	5GH–1410A–00	.STARTER SET			1			
	5ND–1410A–00	.STARTER SET	1	1				
22	3G2–14231–14	.JET,PILOT AIR(#70)	1	1	1			

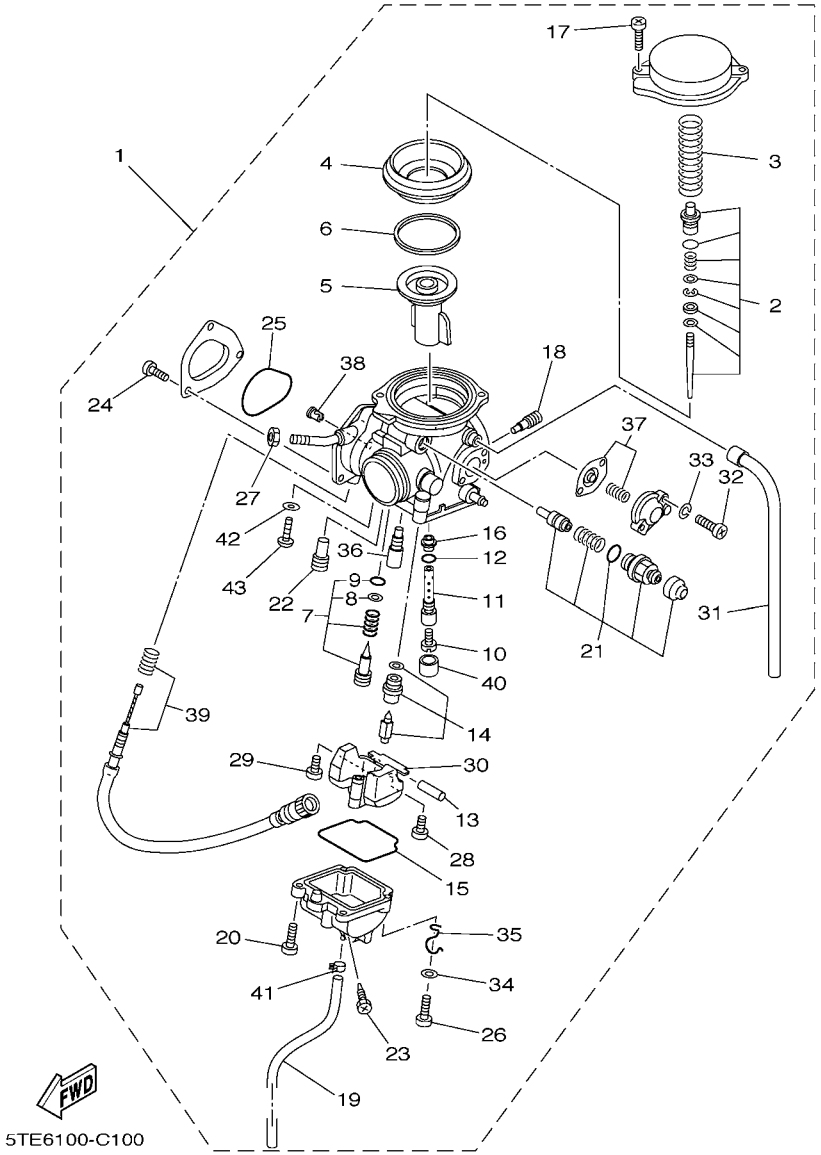

FIG. 10 CARBURETOR

REF. NO.	PART NO.	DESCRIPTION	USA	CAN	EUR			REMARKS
23	3FV–14191–00	.PLUG, DRAIN	1	1	1			
24	9850L–04006	.SCREW, PAN HEAD	3	3	3			
25	5FU–E4147–00	.O-RING	1	1	1			
26	98507–04014	.SCREW, PAN HEAD	1	1	1			
27	522–14161–00	.NUT, CABLE ADJUSTING	1	1	1			
28	98507–04008	.SCREW, PAN HEAD	1	1	1			
29	1FN–14565–00	.SCREW	1	1	1			
30	5DM–14985–00	.FLOAT	1	1	1			
31	5GH–14197–00	.PIPE	1	1	1			
32	98501–04014	.SCREW, PAN HEAD	2	2	2			
33	92902–04100	.WASHER, SPRING	2	2	2			
34	92907–04600	.WASHER	1	1	1			
35	5GH–14937–00	.CLIP	1	1	1			
36	4KM–14142–17	.JET, PILOT (# 17.5)	1	1	1			
37	5ND–1490H–00	.DIAPHRAGM SET 5	1	1	1			
38	5FU–E4155–00	.GUIDE, CABLE	1	1	1			
39	5GH–14103–01	.THROTTLE SCREW SET	1	1	1			
40	5GH–14918–00	.RING	1	1	1			
41	4XE–14937–00	.CLIP	1	1	1			
42	256–14956–01	.WASHER	1	1	1			
43	3DM–14216–00	.SCREW	1	1	1			

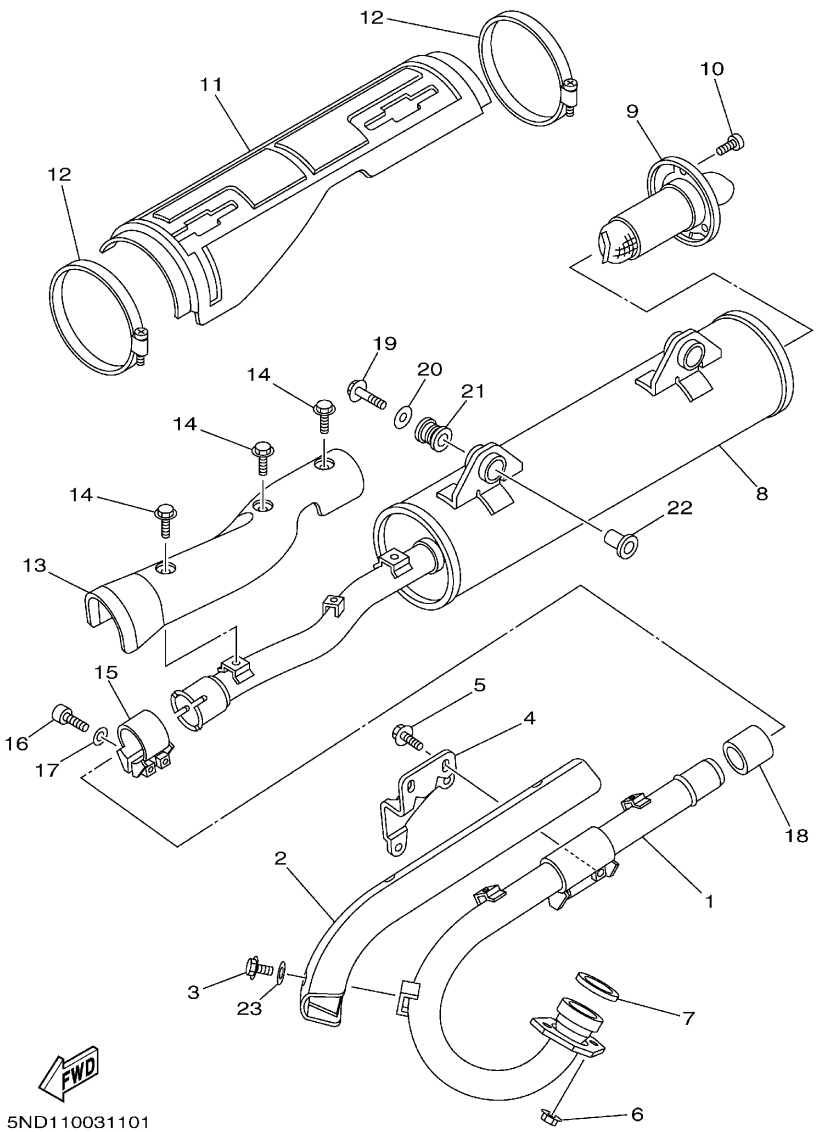

FIG. 11 EXHAUST

REF. NO.	PART NO.	DESCRIPTION	USA	CAN	EUR			REMARKS
1	5ND–E4611–00	PIPE, EXHAUST 1	1	1	1			
2	5ND–E4628–00	PROTECTOR, EXHAUST PIPE	1	1	1			
3	9581P–06010	BOLT, FLANGE	3	3	3			
4	5ND–E477K–01	PLATE 1	1	1	1			
5	9581P–06016	BOLT, FLANGE	2	2	2			
6	90179–08410	NUT	2	2	2			
7	3GD–14613–00	GASKET, EXHAUST PIPE	1	1	1			
8	5ND–E4711–00	MUFFLER 1	1	1	1			
9	5ND–E4752–00	PIPE, OUTLET	1	1	1			
10	5ND–E4719–00	BOLT, MUFFLER	3	3	3			
11	5ND–E4718–00	PROTECTOR, MUFFLER 1	1	1	1			
12	5ND–E4788–00	BAND, SILENCER	2	2	2			
13	5ND–E4728–00	PROTECTOR, MUFFLER 2	1	1	1			
14	9581P–06008	BOLT, FLANGE	3	3	3			
15	5ND–E4715–00	BAND, MUFFLER	1	1	1			
16	5ND–E4777–00	BOLT	2	2	2			
17	5ND–E4759–00	WASHER	2	2	2			
18	5ND–E4714–00	GASKET, MUFFLER	1	1	1			
19	95827–10040	BOLT, FLANGE	2	2	2			
20	90201–106E0	WASHER, PLATE	2	2	2			
21	5ND–E4737–00	DAMPER, MUFFLER	2	2	2			
22	90387–10636	COLLAR	2	2	2			
23	90201–06008	WASHER, PLAIN	3	3	3			

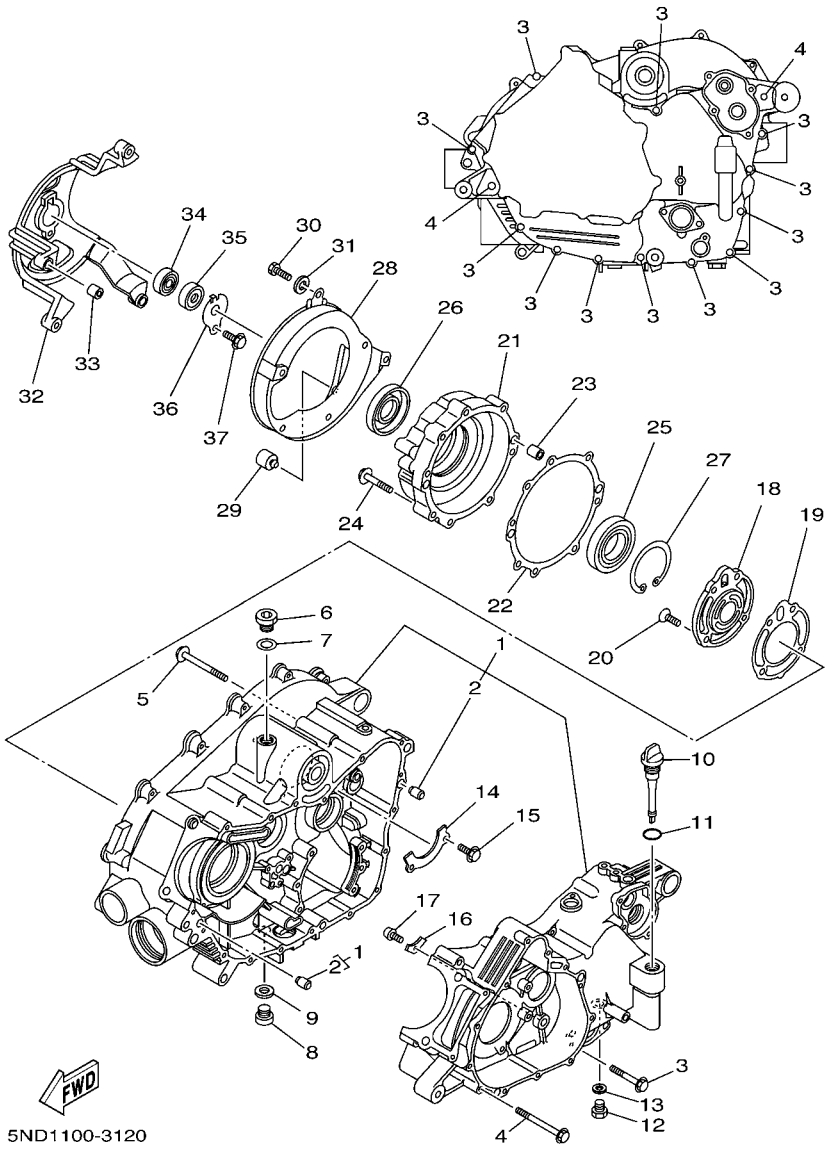

FIG. 12 CRANKCASE

REF. NO.	PART NO.	DESCRIPTION	USA	CAN	EUR			REMARKS
1	5ND–15100–02	CRANKCASE ASSY	1	1	1			
2	99530–10114	.PIN, DOWEL	2	2	2			
3	95027–06040	BOLT, FLANGE	12	12	12			
4	95027–06065	BOLT, FLANGE	2	2	2			
5	95027–06065	BOLT, FLANGE	3	3	3			
6	90340–18101	PLUG, STRAIGHT SCREW	1	1	1			
7	90430–18130	GASKET	1	1	1			
8	90340–14002	PLUG, STRAIGHT SCREW	1	1	1			
9	214–11198–01	GASKET	1	1	1			
10	5GH–15362–00	PLUG, OIL LEVEL	1	1	1			
11	93210–19026	O-RING	1	1	1			
12	90340–14029	PLUG, STRAIGHT SCREW	1	1	1			
13	214–11198–01	GASKET	1	1	1			
14	5GH–15388–00	PLATE, BEARING COVER	1	1	1			
15	95827–06012	BOLT, FLANGE	2	2	2			
16	2K7–15383–00	PLATE, BEARING COVER	1	1	1			
17	90151–06014	SCREW, COUNTERSUNK	1	1	1			
18	5GH–15414–00	COVER, AIR CLEANER	1	1	1			
19	5GH–15454–00	GASKET 1	1	1	1			
20	98707–06020	SCREW, FLAT HEAD	4	4	4			
21	5GH–15163–00	HOUSING, BEARING 1	1	1	1			
22	5GH–15463–00	GASKET, COVER PINION 2	1	1	1			
23	99530–10114	PIN, DOWEL	2	2	2			
24	95027–06040	BOLT, FLANGE	8	8	8			
25	93316–01003	BEARING	1	1	1			
26	93102–32483	OIL SEAL	1	1	1			
27	99009–80500	CIRCLIP	1	1	1			

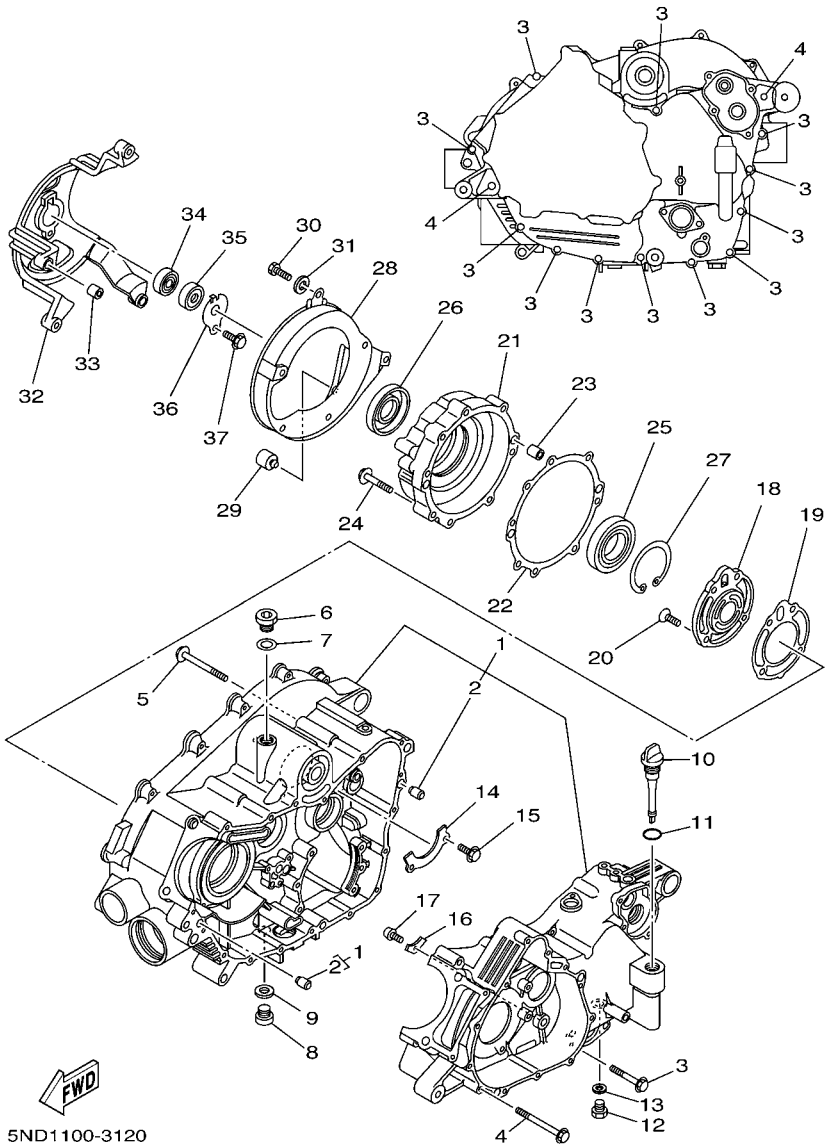

FIG. 12 CRANKCASE

REF. NO.	PART NO.	DESCRIPTION	USA	CAN	EUR			REMARKS
28	5GH–15333–00	COVER	1	1	1			
29	5GH–15338–00	DAMPER, ENGINE MOUNT 5	1	1	1			
30	97017–06016	BOLT	6	6	6			
31	92907–06600	WASHER, PLATE	6	6	6			
32	5GH–15442–01	HOUSING, BEARING	1	1	1			
33	91810–20001	PIN, DOWEL	2	2	2			
34	93306–20120	BEARING	1	1	1			
35	93101–12168	OIL SEAL	1	1	1			
36	4WV–15381–00	PLATE, BEARING COVER	1	1	1			
37	95027–06012	BOLT, FLANGE	1	1	1			

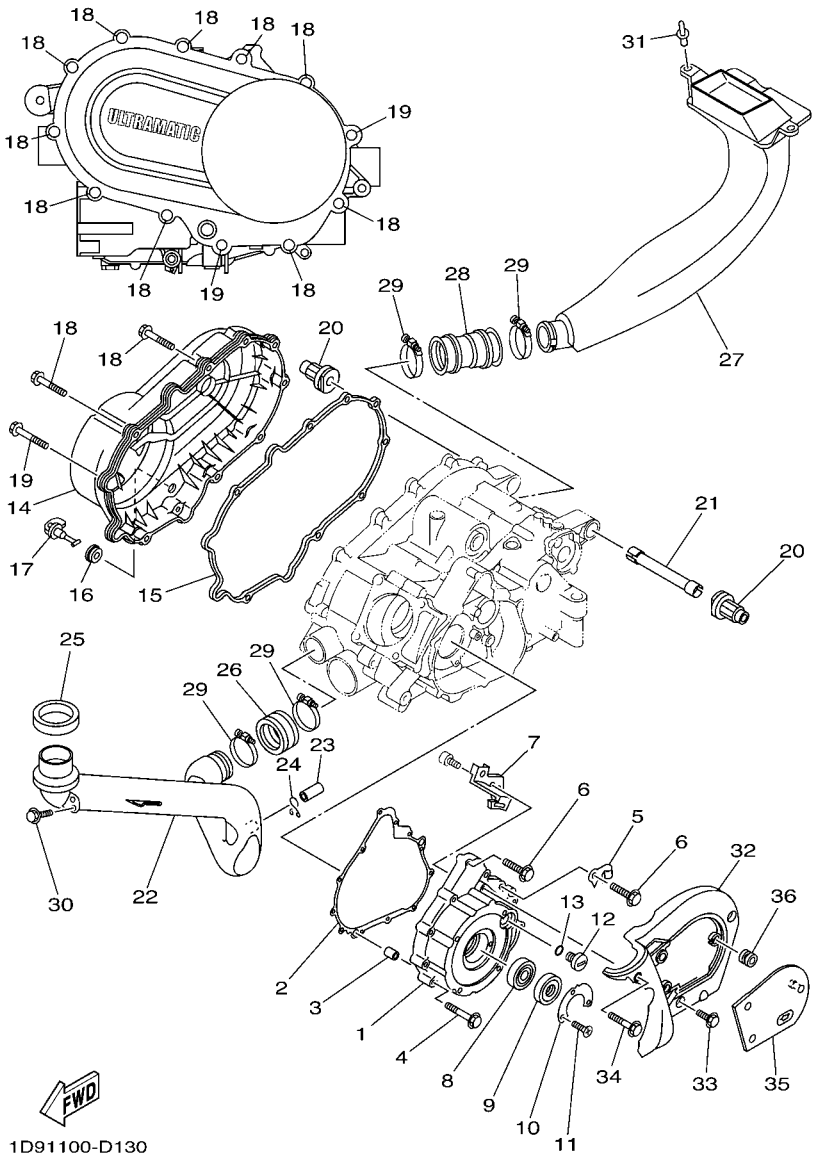

FIG. 13 CRANKCASE COVER 1

REF. NO.	PART NO.	DESCRIPTION	USA	CAN	EUR			REMARKS
1	5GH–15411–01	COVER, CRANKCASE 1	1	1	1			
2	5GH–15451–00	GASKET, CRANKCASE COVER 1	1	1	1			
3	99530–10114	PIN, DOWEL	2	2	2			
4	95027–06040	BOLT, FLANGE	8	8	8			
5	90465–08127	CLAMP	1	1	1			
6	95027–06030	BOLT, FLANGE	4	4	4			
7	5GH–15113–00	PLATE	1	1	1			
8	93306–07801	BEARING	1	1	1			
9	93102–28476	OIL SEAL	1	1	1			
10	21V–15719–00	WASHER, THRUST	1	1	1			
11	90151–05023	SCREW, COUNTERSUNK	2	2	2			
12	90340–14117	PLUG, STRAIGHT SCREW	1	1	1			
13	93210–14369	O-RING	1	1	1			
14	5ND–15431–00	COVER, CRANKCASE 3	1	1	1			
15	5GH–15379–00	SEAL, CRANKCASE	1	1	1			
16	90480–13018	GROMMET	1	1	1			
17	5KM–15351–00	PLUG, DRAIN	1	1	1			
18	95827–06035	BOLT, FLANGE	10	10	10			
19	95827–06045	BOLT, FLANGE	2	2	2			
20	5GH–15336–00	DAMPER, ENGINE MOUNT 3	2	2	2			
21	5GH–15317–00	SPACER, ENGINE MOUNT	1	1	1			
22	5ND–E5471–00	DUCT, AIR	1	1	1			
23	5BF–1443E–00	PIPE, DRAIN	1	1	1			
24	90467–16195	CLIP	1	1	1			
25	5ND–E5434–00	SEAL, CLEANER COVER	1	1	1			
26	5ND–E5472–00	SEAL, AIR DUCT	1	1	1			
27	1D9–E5473–00	DUCT, AIR	1	1	1			

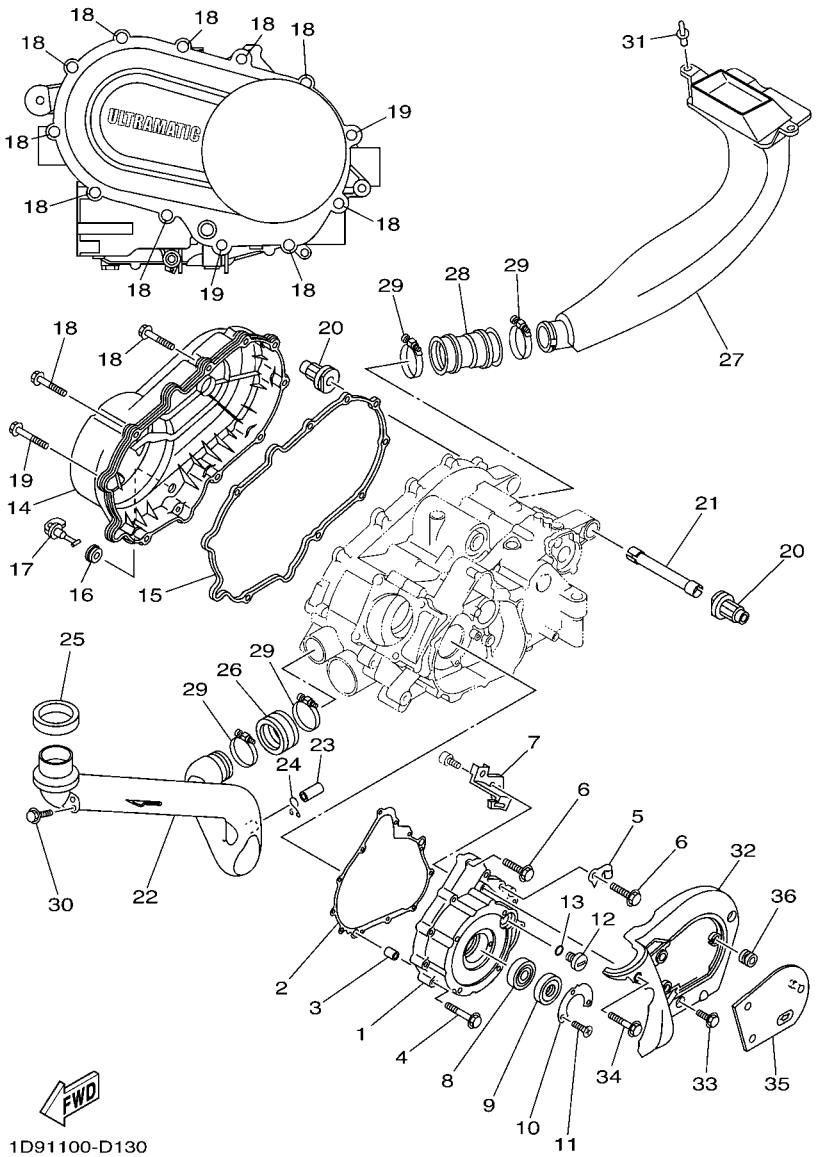

FIG. 13 CRANKCASE COVER 1

REF. NO.	PART NO.	DESCRIPTION	USA	CAN	EUR			REMARKS
28	1D9–E5474–00	SEAL, AIR DUCT	1	1	1			
29	90450–64002	HOSE CLAMP ASSY	4	4	4			
30	95807–06014	BOLT, FLANGE	1	1	1			
31	90269–08813	RIVET	2	2	2			
32	5ND–E5423–00	COVER 2	1	1	1			
33	95027–06014	BOLT, FLANGE	2	2	2			
34	95027–06035	BOLT, FLANGE	1	1	1			
35	5ND–E5413–00	COVER	1	1	1			
36	90480–13398	GROMMET	3	3	3			

FIG. 14 STARTER

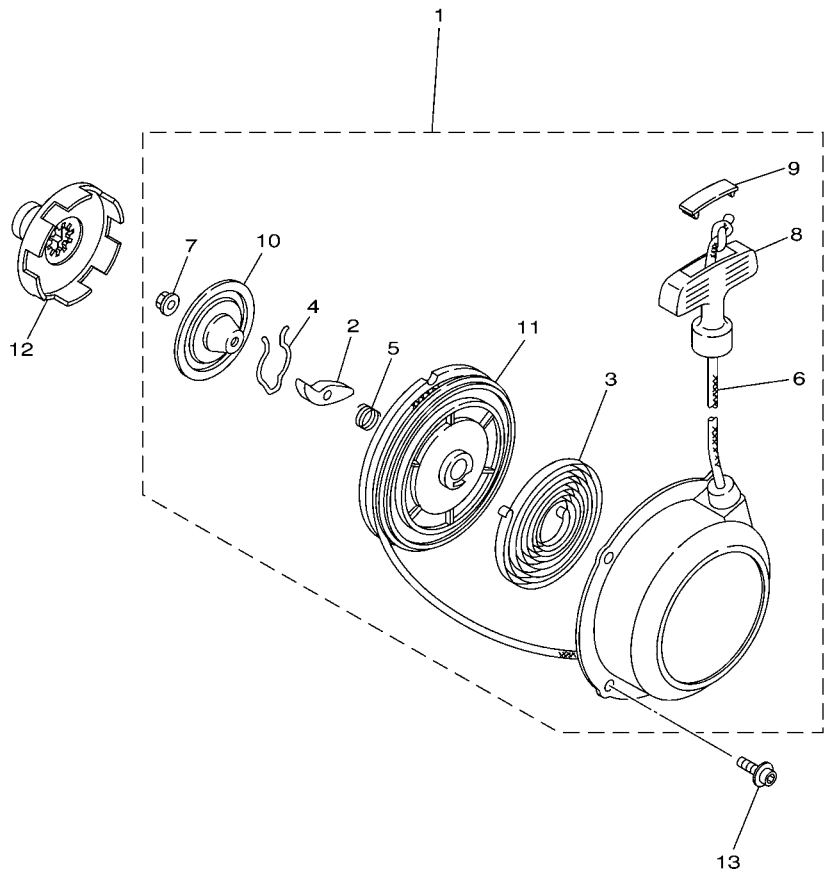

REF. NO.	PART NO.	DESCRIPTION	USA	CAN	EUR			REMARKS
1	5UH–15710–00	STARTER ASSY	1	1	1			
2	21V–15741–00	.PAWL, DRIVE	1	1	1			
3	5UH–15713–00	.SPRING, STARTER	1	1	1			
4	21V–15715–01	.SPRING, FRICTION	1	1	1			
5	21V–15767–00	.SPRING	1	1	1			
6	21V–15751–00	.WIRE, STARTER	1	1	1			
7	95702–06500	.NUT, FLANGE	1	1	1			
8	3X3–15755–00	.HANDLE, STARTER	1	1	1			
9	21V–15779–00	.COVER	1	1	1			
10	5UH–15716–00	.PLATE, DRIVE	1	1	1			
11	24W–15714–00	.DRUM, SHEAVE	1	1	1			
12	1UY–15723–00	PULLEY, STARTER	1	1	1			
13	90110–06037	BOLT, HEXAGON SOCKET HEAD	4	4	4			

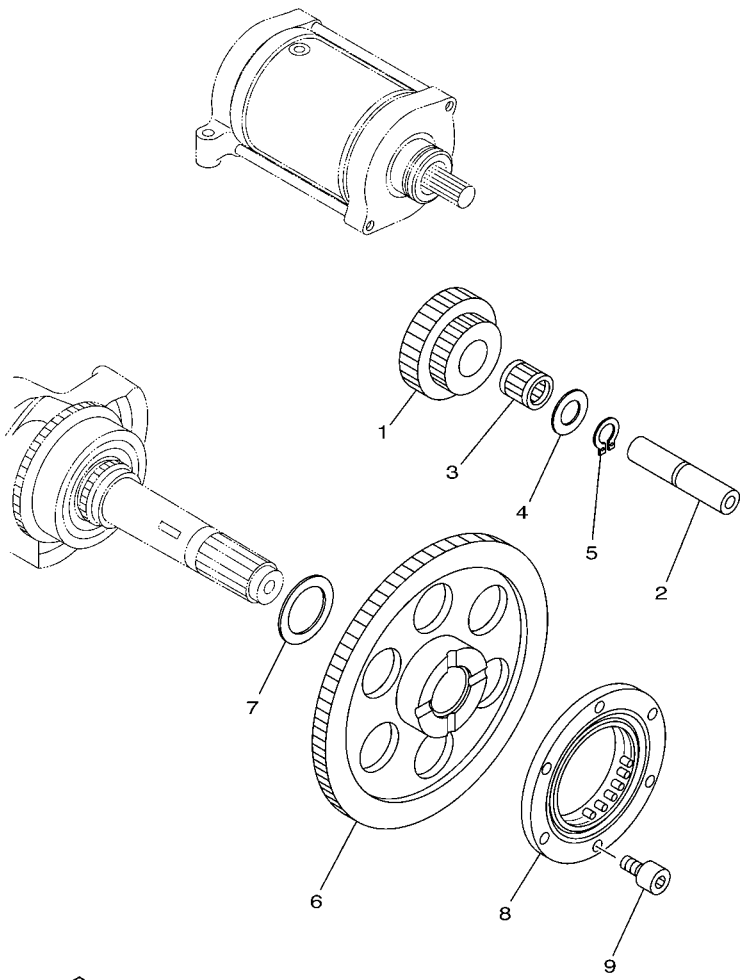

5GHK110-2150

FIG. 15 STARTER CLUTCH

REF. NO.	PART NO.	DESCRIPTION	USA	CAN	EUR			REMARKS
1	5GH–15512–00	GEAR, IDLER 1	1	1	1			
2	4KB–15522–01	SHAFT 2	1	1	1			
3	93310–212R6	BEARING	1	1	1			
4	90201–123K4	WASHER, PLATE	1	1	1			
5	99009–12400	CIRCLIP	1	1	1			
6	5GH–15517–10	GEAR, IDLER 2	1	1	1			
7	90201–25291	WASHER, PLATE	1	1	1			
8	1UY–15590–01	STARTER ONE-WAY ASSY	1	1	1			
9	91317–08016	BOLT	6	6	6			

FIG. 16 CLUTCH

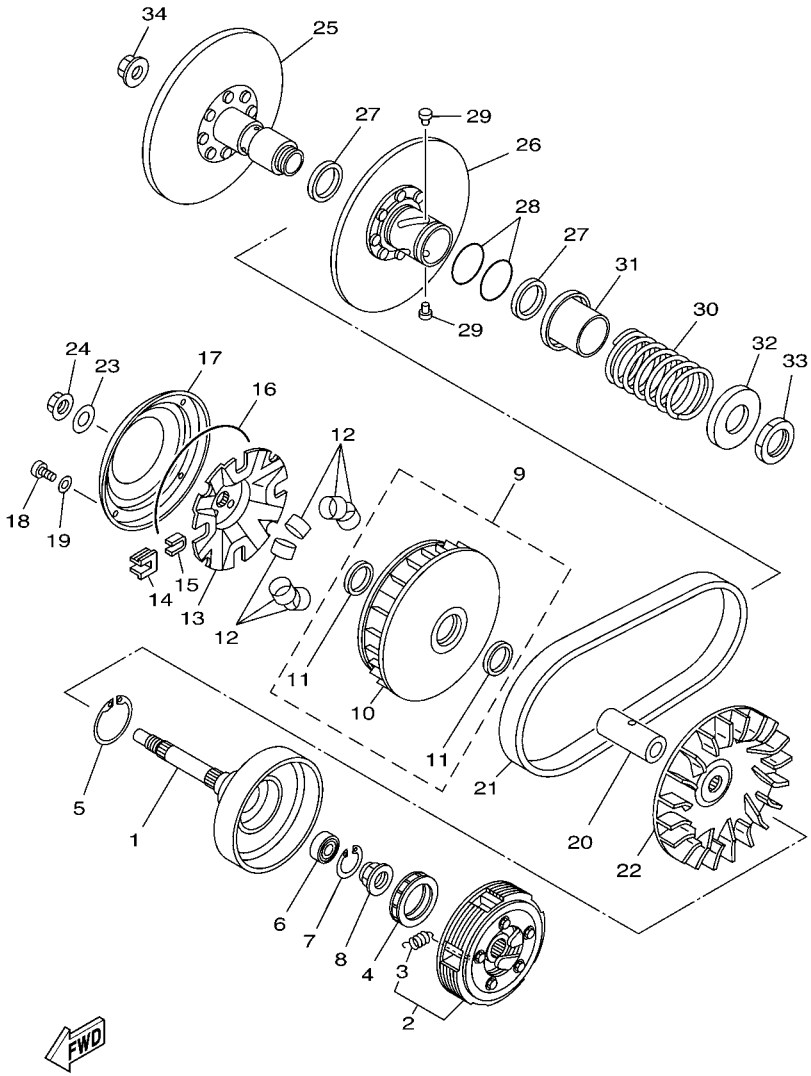

REF. NO.	PART NO.	DESCRIPTION	USA	CAN	EUR			REMARKS
1	5GH–16611–10	CLUTCH HOUSING COMP.	1	1	1			
2	5GH–16620–00	CLUTCH CARRIER ASSY	1	1	1			
3	5GH–16626–00	.SPRING, CLUTCH WEIGHT 1	5	5	5			
4	5GH–16664–00	BEARING, ONE WAY	1	1	1			
5	93410–46079	CIRCLIP	1	1	1			
6	93315–21813	BEARING	1	1	1			
7	93450–24062	CIRCLIP	1	1	1			
8	90179–22005	NUT	1	1	1			
9	5GH–17606–00	PRIMARY SLIDING SHEAVE COMP.	1	1	1			
10	5GH–17620–00	.PRIMARY SLIDING SHEAVE COMP.	1	1	1			
11	93101–31167	.OIL SEAL	2	2	2			
12	5GH–17632–00	WEIGHT	8	8	8			
13	5GH–17623–00	CAM	1	1	1			
14	4WV–17653–00	SLIDER	4	4	4			
15	4WV–17654–01	SPACER 1	4	4	4			
16	93211–52001	O-RING	1	1	1			
17	5GH–17639–00	STOPPER	1	1	1			
18	90157–04088	SCREW, PAN HEAD	4	4	4			
19	90201–047R9	WASHER, PLATE	4	4	4			
20	90387–1914K	COLLAR	1	1	1			
21	5GH–17641–10	V-BELT	1	1	1			
22	5UH–17611–00	SHEAVE, PRIMARY FIXED	1	1	1			
23	90201–190T7	WASHER, PLATE	1	1	1			
24	90179–16001	NUT	1	1	1			
25	5GH–17660–10	SECONDARY FIXED SHEAVE COMP.	1	1	1			
26	5GH–17670–00	SECONDARY SLIDING SHEAVE	1	1	1			
27	93104–41119	OIL SEAL	2	2	2			

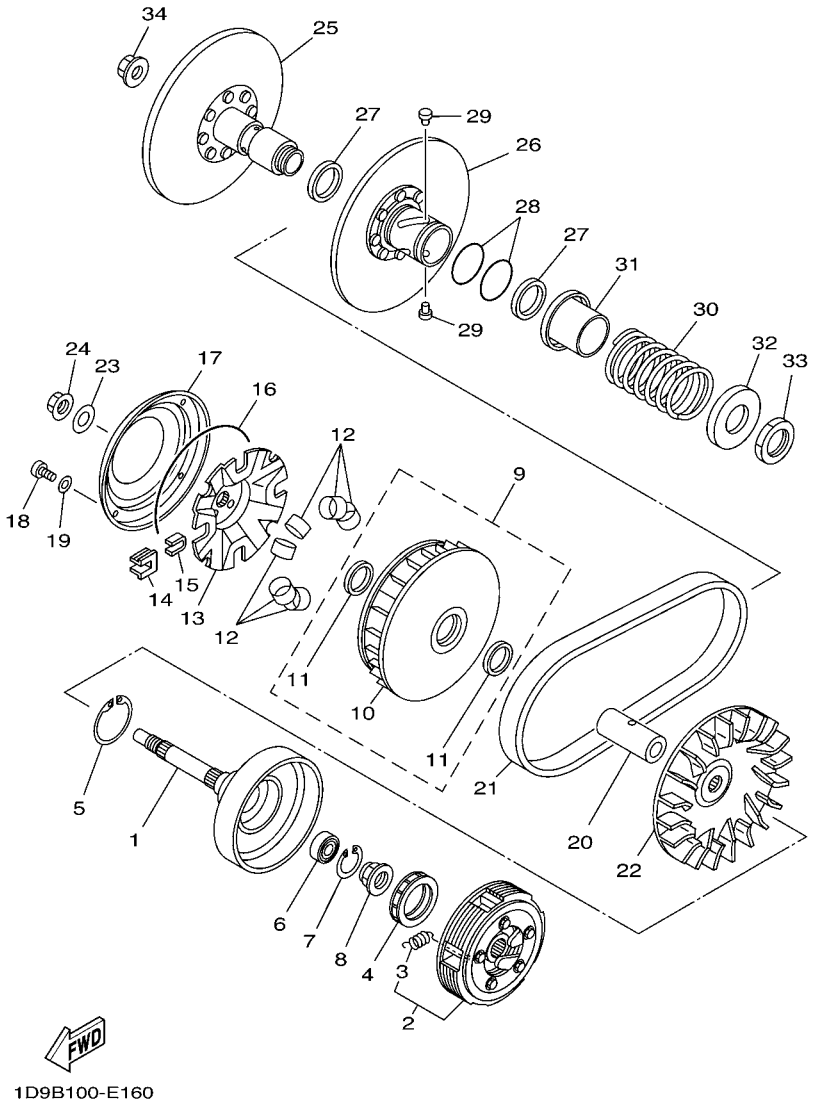

FIG. 16 CLUTCH

REF. NO.	PART NO.	DESCRIPTION	USA	CAN	EUR			REMARKS
28	93210–44545	O-RING	2	2	2			
29	4CW–17664–00	PIN, GUIDE	4	4	4			
30	90501–626L9	SPRING, COMPRESSION	1	1	1			
31	4WV–17684–00	SEAT, SECONDARY SPRING	1	1	1			
32	4WV–17644–00	SEAT,SPRING	1	1	1			
33	90170–36279	NUT	1	1	1			
34	90179–16001	NUT	1	1	1			

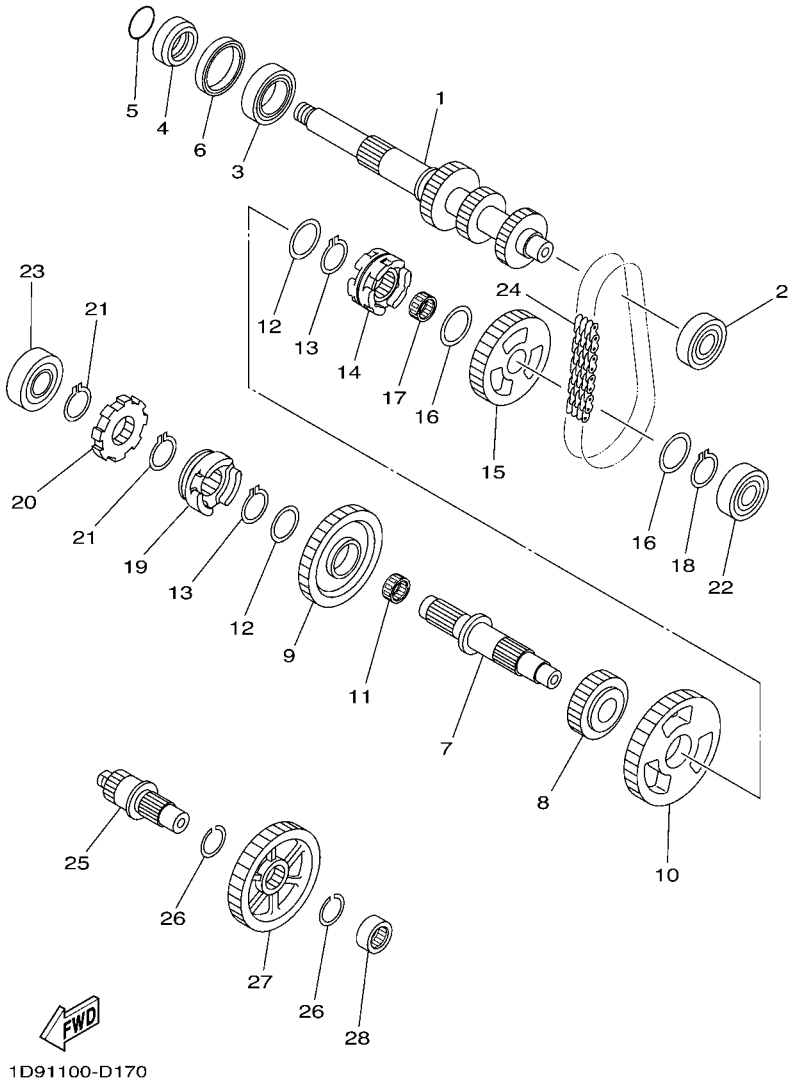

FIG. 17 TRANSMISSION

REF. NO.	PART NO.	DESCRIPTION	USA	CAN	EUR			REMARKS
1	5GH–17681–11	SHAFT, SECONDARY	1	1	1			
2	93306–00415	BEARING	1	1	1			
3	93306–20601	BEARING	1	1	1			
4	90387–26001	COLLAR	1	1	1			
5	93210–26001	O-RING	1	1	1			
6	93102–42004	OIL SEAL	1	1	1			
7	5GH–17402–01	DRIVE AXLE ASSY	1	1	1			
8	5GH–17582–00	GEAR, MIDDLE DRIVE(24T)	1	1	1			
9	5GH–17223–00	GEAR, HIGH WHEEL(38T)	1	1	1			
10	5GH–17233–11	GEAR, LOW WHEEL(45T)	1	1	1			
11	93310–32590	BEARING	1	1	1			
12	90201–250R9	WASHER, PLATE	2	2	2			
13	93440–25084	CIRCLIP	2	2	2			
14	1D9–17285–00	CLUTCH, DOG	1	1	1			
15	5GH–17453–10	SPROCKET, DRIVEN(29T)	1	1	1			
16	90201–20278	WASHER, PLATE	2	2	2			
17	93310–420F2	BEARING	1	1	1			
18	93410–20038	CIRCLIP	1	1	1			
19	1D9–17286–00	HOLDER	1	1	1			
20	5GH–17473–00	STOPPER	1	1	1			
21	93440–25084	CIRCLIP	2	2	2			
22	93306–30201	BEARING	1	1	1			
23	93306–20464	BEARING	1	1	1			
24	94591–54038	CHAIN(23RH302-38 ASM)	1	1	1			
25	5ND–17523–00	SHAFT	1	1	1			
26	93440–25084	CIRCLIP	2	2	2			
27	5GH–17583–00	GEAR, MIDDLE DRIVEN(39T)	1	1	1			

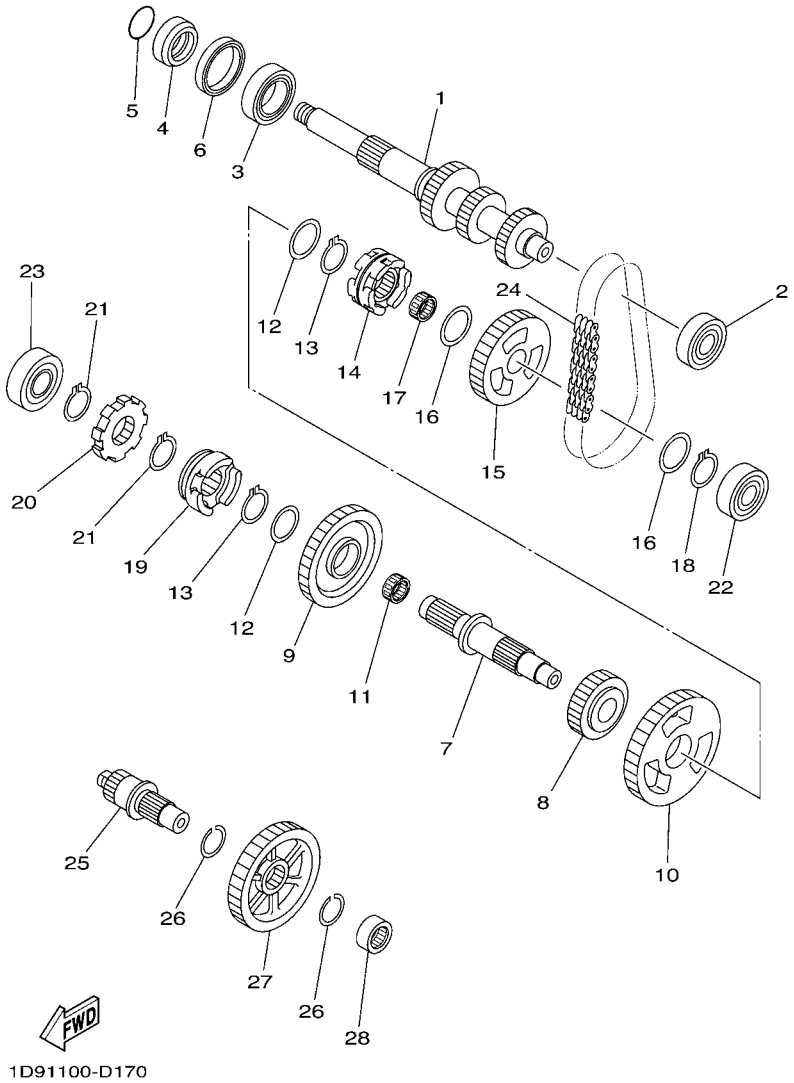

FIG. 17 TRANSMISSION

REF. NO.	PART NO.	DESCRIPTION	USA	CAN	EUR			REMARKS
28	93311–42077	BEARING	1	1	1			

FIG. 18 MIDDLE DRIVE GEAR

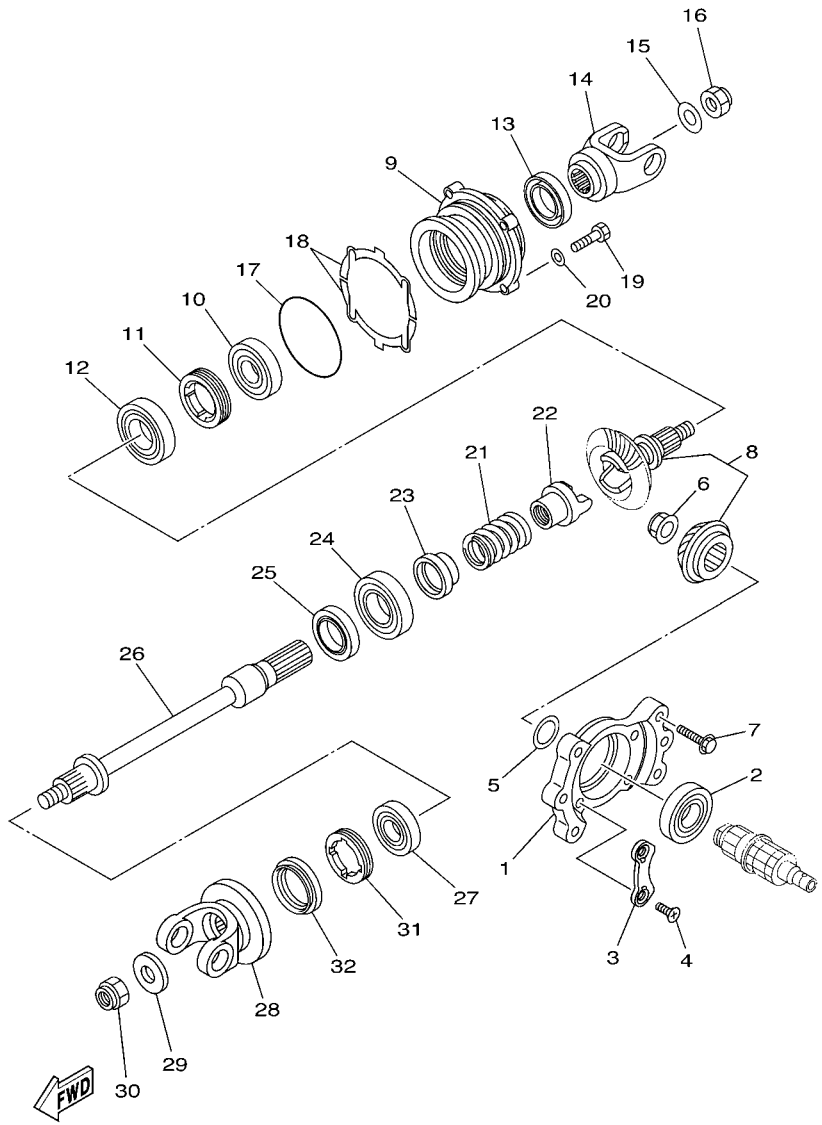

REF. NO.	PART NO.	DESCRIPTION	USA	CAN	EUR			REMARKS
1	5GH–17521–00	HOUSING, BEARING	1	1	1			
2	93306–20622	BEARING	1	1	1			
3	11H–15383–02	PLATE, BEARING COVER	2	2	2			
4	90149–08152	SCREW	4	4	4			
5	52G–17531–01	SHIM, PINION (0.1T)	1	1	1			UR
	52G–17531–11	SHIM, PINION (0.15T)	1	1	1			UR
	52G–17531–21	SHIM, PINION (0.2T)	1	1	1			UR
	52G–17531–31	SHIM, PINION (0.3T)	1	1	1			UR
	52G–17531–41	SHIM, PINION (0.4T)	1	1	1			UR
	52G–17531–51	SHIM, PINION (0.5T)	1	1	1			UR
6	90179–22015	NUT	1	1	1			
7	95817–08030	BOLT, FLANGE	6	6	6			
8	4WV–17530–00	PINION SET	1	1	1			
9	5GH–17551–00	HOUSING, BEARING	1	1	1			
10	93306–30538	BEARING	1	1	1			
11	90179–65305	NUT	1	1	1			
12	93306–20715	BEARING	1	1	1			
13	93102–35012	OIL SEAL	1	1	1			
14	1D9–17556–00	YOKE, JOINT	1	1	1			
15	90201–14633	WASHER, PLATE	1	1	1			
16	90185–14009	NUT, SELF-LOCKING	1	1	1			
17	93210–78544	O-RING	1	1	1			
18	5GH–17531–00	SHIM, PINION (0.1T)	2	2	2			UR
	5GH–17531–10	SHIM, PINION (0.15T)	2	2	2			UR
	5GH–17531–20	SHIM, PINION (0.2T)	2	2	2			UR
	5GH–17531–30	SHIM, PINION (0.3T)	2	2	2			UR
	5GH–17531–40	SHIM, PINION (0.4T)	2	2	2			UR

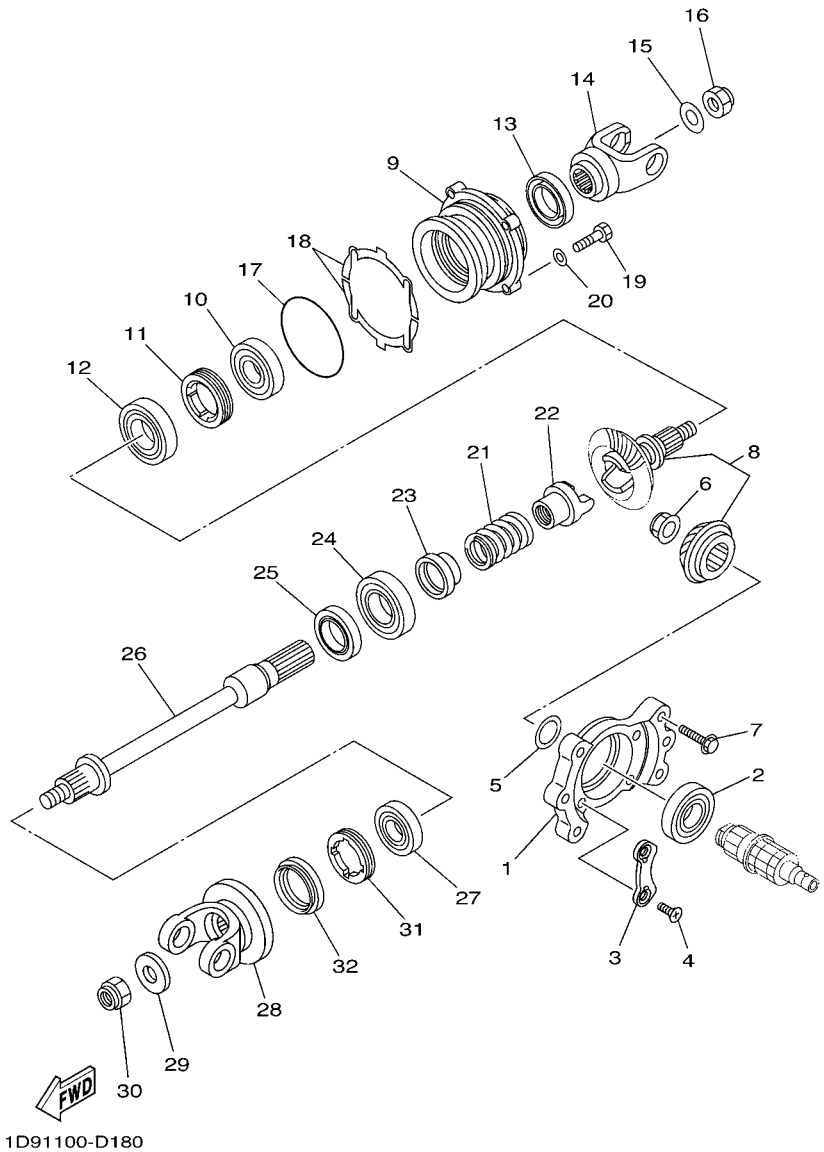

FIG. 18 MIDDLE DRIVE GEAR

REF. NO.	PART NO.	DESCRIPTION	USA	CAN	EUR			REMARKS
18	5GH–17531–50	SHIM, PINION (0.5T)	2	2	2			UR
	5GH–17531–60	SHIM, PINION (0.6T)	2	2	2			UR
19	97027–08030	BOLT	4	4	4			
20	92907–08600	WASHER, PLATE	4	4	4			
21	90501–650L5	SPRING, COMPRESSION	1	1	1			
22	4VR–17527–00	CAM, DRIVEN	1	1	1			
23	5UH–17585–00	COLLAR, GEAR	1	1	1			
24	93306–00612	BEARING	1	1	1			
25	93102–30170	OIL SEAL	1	1	1			
26	1D9–1761A–00	SHAFT, 1	1	1	1			
27	93306–20582	BEARING	1	1	1			
28	5KM–17576–00	YOKE,JOINT 2	1	1	1			
29	90201–14633	WASHER, PLATE	1	1	1			
30	90185–14070	NUT, SELF-LOCKING	1	1	1			
31	90179–55660	NUT	1	1	1			
32	93102–44454	OIL SEAL	1	1	1			

FIG. 19 SHIFT CAM & FORK

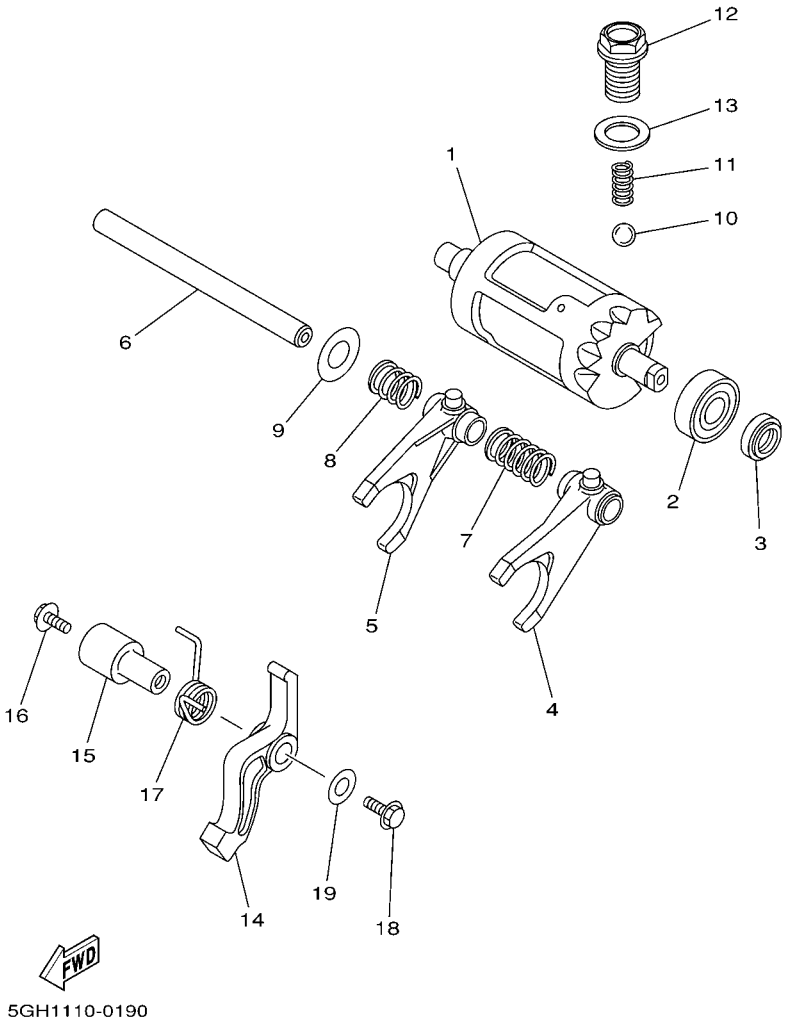

REF. NO.	PART NO.	DESCRIPTION	USA	CAN	EUR			REMARKS
1	5ND–18540–00	SHIFT CAM ASSY	1	1	1			
2	93306–00208	BEARING	1	1	1			
3	93102–15212	OIL SEAL	1	1	1			
4	1D9–18511–00	FORK, SHIFT 1	1	1	1			
5	1D9–18512–00	FORK, SHIFT 2	1	1	1			
6	4KB–18531–01	BAR, SHIFT FORK GUIDE 1	1	1	1			
7	90501–130A1	SPRING, COMPRESSION	1	1	1			
8	90501–166L4	SPRING, COMPRESSION	1	1	1			
9	90201–15564	WASHER, PLATE (1.5T)	1	1	1			
10	93503–08007	BALL	1	1	1			
11	90501–10353	SPRING, COMPRESSION	1	1	1			
12	90105–14003	BOLT, FLANGE	1	1	1			
13	90430–14194	GASKET	1	1	1			
14	5GH–18148–00	LEVER, STOPPER	1	1	1			
15	5GH–1812E–00	SHAFT, STOPPER	1	1	1			
16	95027–06016	BOLT, FLANGE	1	1	1			
17	90508–235B7	SPRING, TORSION	1	1	1			
18	95027–06014	BOLT, FLANGE	1	1	1			
19	90201–06060	WASHER, PLATE	1	1	1			

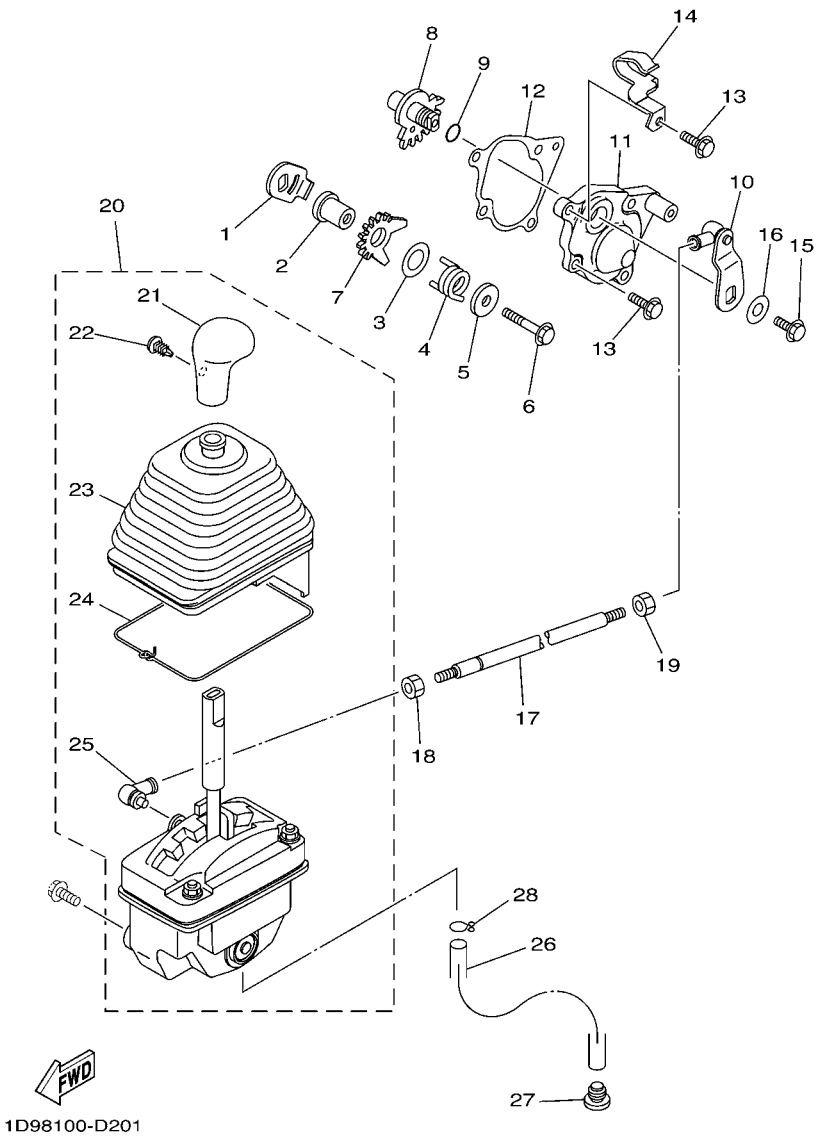

FIG. 20 SHIFT SHAFT

REF. NO.	PART NO.	DESCRIPTION	USA	CAN	EUR			REMARKS
1	4SH–18198–00	LEVER	1	1	1			
2	90387–0613B	COLLAR	1	1	1			
3	90201–132G5	WASHER, PLATE	1	1	1			
4	90508–35764	SPRING, TORSION	1	1	1			
5	90201–06008	WASHER, PLATE	1	1	1			
6	95817–06035	BOLT, FLANGE	1	1	1			
7	5KM–18191–00	LEVER	1	1	1			
8	5GH–18197–00	SHAFT	1	1	1			
9	93210–11073	O-RING	1	1	1			
10	5GH–18104–00	SHIFT GUIDE COMP.	1	1	1			
11	5GH–18129–01	COVER, SHIFT SHAFT	1	1	1			
12	5GH–18146–00	GASKET	1	1	1			
13	97080–06020	BOLT	4	4	4			
14	90465–08336	CLAMP	1	1	1			
15	95817–06016	BOLT, FLANGE	1	1	1			
16	90201–06008	WASHER, PLATE	1	1	1			
17	5GH–18115–01	ROD, SHIFT	1	1	1			
18	90170–08358	NUT	1	1	1			
19	95307–08700	NUT	1	1	1			
20	5GH–18300–02	SHIFTER ASSY	1	1	1			
21	5GH–18174–00	.KNOB, SHIFT LEVER	1	1	1			
22	90269–05055	.RIVET	1	1	1			
23	5GH–18131–00	.BOOT, SEALING	1	1	1			
24	5GH–18617–00	.STOPPER,RUBBER	1	1	1			
25	1KT–18157–00	.JOINT 2	1	1	1			
26	90446–16001	HOSE (L90)	1	1	1			
27	5ND–E4191–00	PLUG, DRAIN	1	1	1			

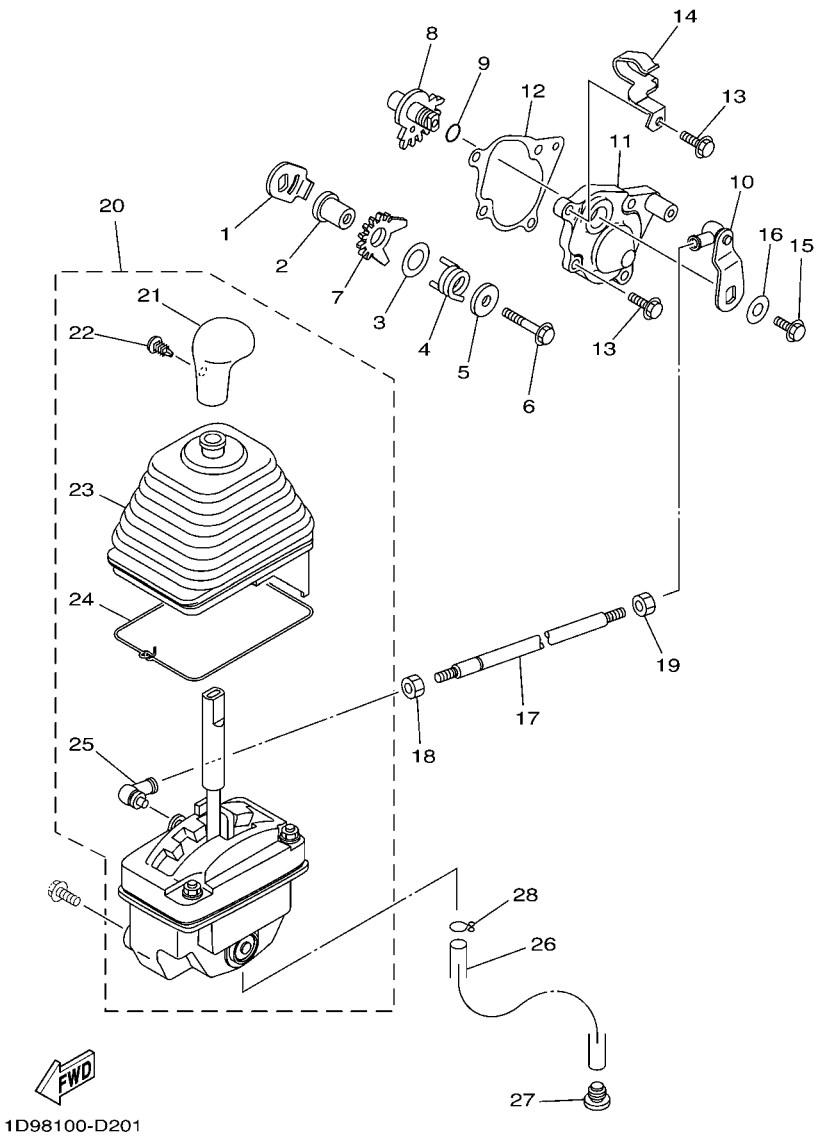

FIG. 20 SHIFT SHAFT

REF. NO.	PART NO.	DESCRIPTION	USA	CAN	EUR			REMARKS
28	90467–15012	CLIP	1	1	1			

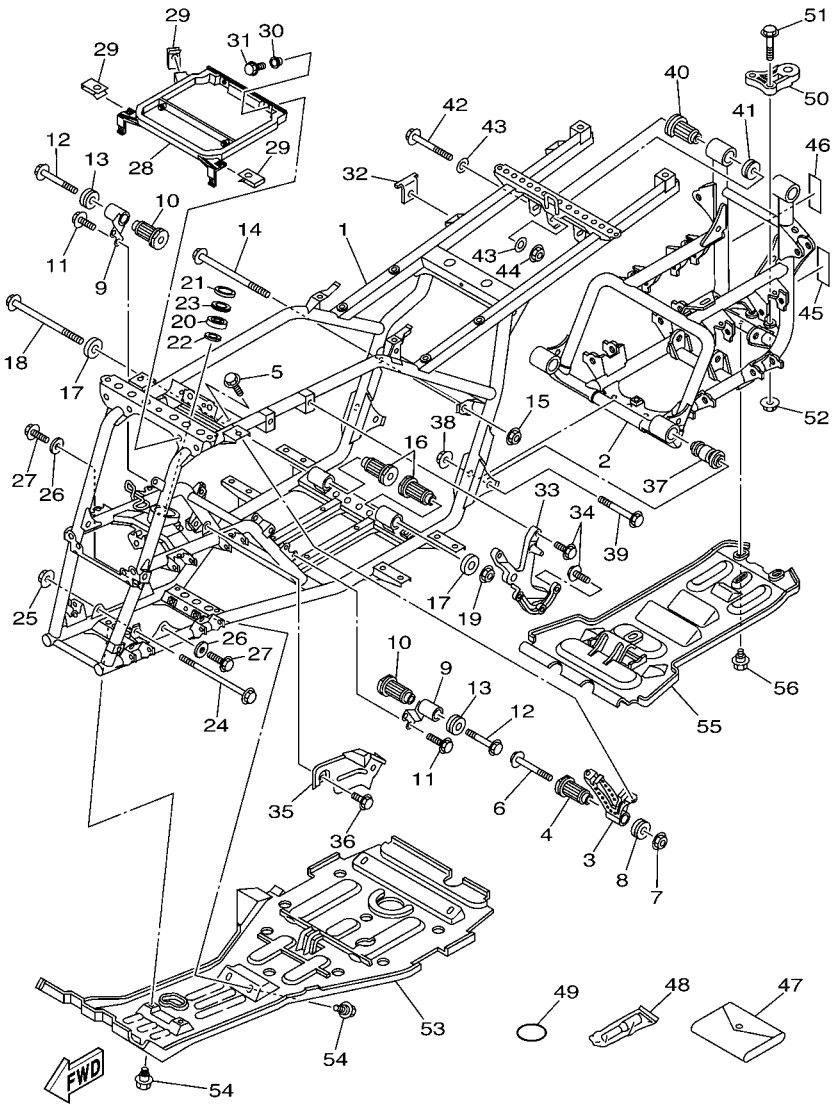

FIG. 21 FRAME

REF. NO.	PART NO.	DESCRIPTION	USA	CAN	EUR			REMARKS
1	1D9–F1110–00	FRAME COMP.	1	1	1			
2	1D9–F111B–00	FRAME SUB COMP.	1	1	1			
3	5ND–F1315–00	STAY, ENGINE 2	1	1	1			
4	5ND–E5336–00	DAMPER, ENGINE MOUNT 3	1	1	1			
5	9581P–08012	BOLT, FLANGE	2	2	2			
6	95817–10110	BOLT, FLANGE	1	1	1			
7	95607–10200	NUT, U FLANGE	1	1	1			
8	5ND–F1486–00	DAMPER 2	1	1	1			
9	5ND–F1316–00	STAY, ENGINE 3	2	2	2			
10	5ND–E5336–00	DAMPER, ENGINE MOUNT 3	2	2	2			
11	9581P–08012	BOLT, FLANGE	4	4	4			
12	95817–10080	BOLT, FLANGE	2	2	2			
13	5ND–F1486–00	DAMPER 2	2	2	2			
14	90105–10055	BOLT, FLANGE	1	1	1			
15	95607–10200	NUT, U FLANGE	1	1	1			
16	5ND–E5336–00	DAMPER, ENGINE MOUNT 3	2	2	2			
17	5ND–F1488–00	DAMPER	2	2	2			
18	90105–10055	BOLT, FLANGE	1	1	1			
19	95607–10200	NUT, U FLANGE	1	1	1			
20	93306–203YN	BEARING	1	1	1			
21	93102–25081	OIL SEAL	1	1	1			
22	93102–25099	OIL SEAL	1	1	1			
23	2GU–23872–00	HOLDER, BEARING	1	1	1			
24	90105–10051	BOLT, FLANGE	1	1	1			
25	95607–10200	NUT, U FLANGE	1	1	1			
26	90201–101J1	WASHER, PLATE	2	2	2			
27	95817–10025	BOLT, FLANGE	2	2	2			

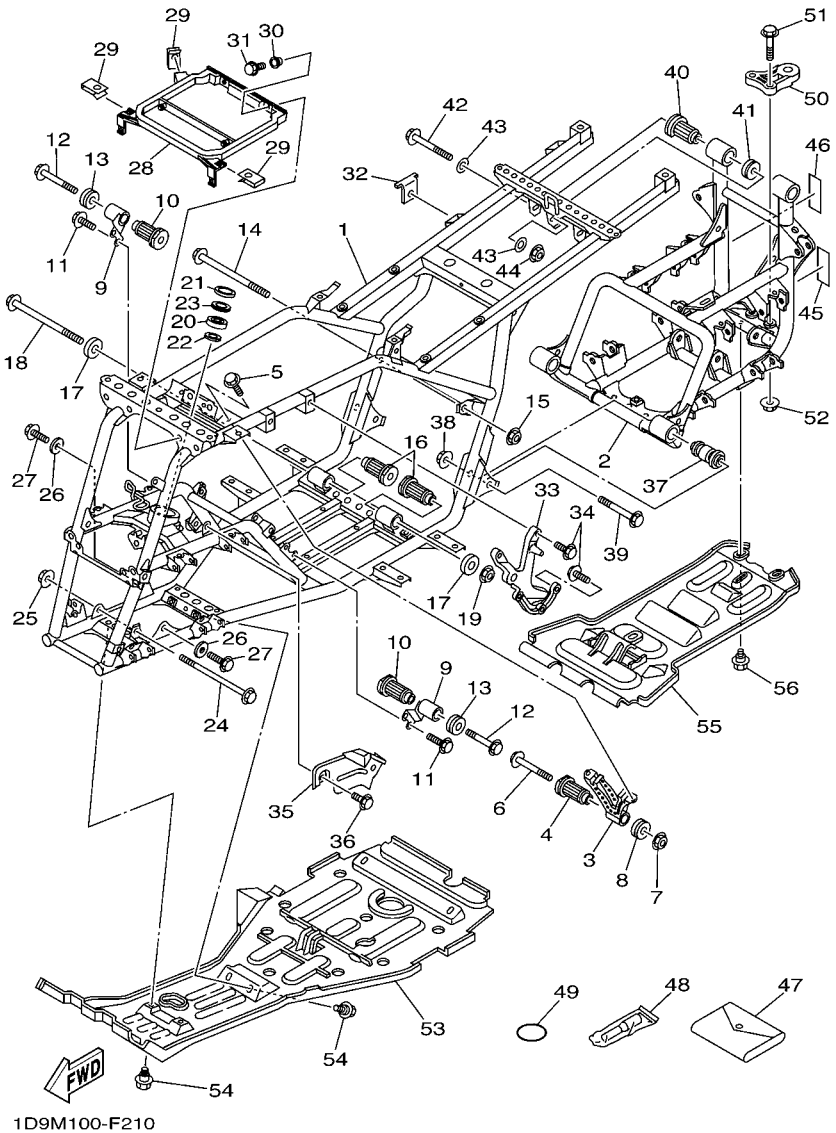

FIG. 21 FRAME

REF. NO.	PART NO.	DESCRIPTION	USA	CAN	EUR			REMARKS
28	5ND–F1513–00	STAY, FENDER 1	1	1	1			
29	90183–06053	NUT, SPRING	3	3	3			
30	90387–06681	COLLAR	2	2	2			
31	95817–06012	BOLT, FLANGE	2	2	2			
32	5ND–F1446–00	STAY, MUFFLER 2	1	1	1			
33	5ND–F1585–01	ARM	1	1	1			
34	95827–08020	BOLT, FLANGE	5	5	5			
35	5ND–F2825–00	PROTECTOR 1	1	1	1			
36	95817–06010	BOLT, FLANGE	2	2	2			
37	5ND–F2123–00	BUSH 1	2	2	2			
38	95607–12200	NUT, SELF-LOCKING	2	2	2			
39	90105–12660	BOLT, FLANGE	2	2	2			
40	1D9–E5336–00	DAMPER, ENGINE MOUNT 3	2	2	2			
41	5ND–F1486–00	DAMPER 2	2	2	2			
42	90105–10711	BOLT, FLANGE	2	2	2			
43	90201–101J1	WASHER, PLATE	4	4	4			
44	95607–10200	NUT, U FLANGE	2	2	2			
45	5ND–F151K–00	LABEL 7	1	1	1			ENGLISH
46	5ND–F151K–10	LABEL 7		1				FRENCH
47	5ND–F8100–00	TOOL KIT	1	1	1			
48	1NV–2811A–01	GAUGE, AIR	1	1	1			
49	93210–64297	O-RING	1	1	1			
50	1D9–F8488–00	HOOK	1	1	1			
51	90105–10669	BOLT, FLANGE	2	2	2			
52	95607–10200	NUT, U FLANGE	2	2	2			
53	5ND–F147A–02	GUARD, ENGINE 1	1	1	1			
54	90109–063F1	BOLT	8	8	8			

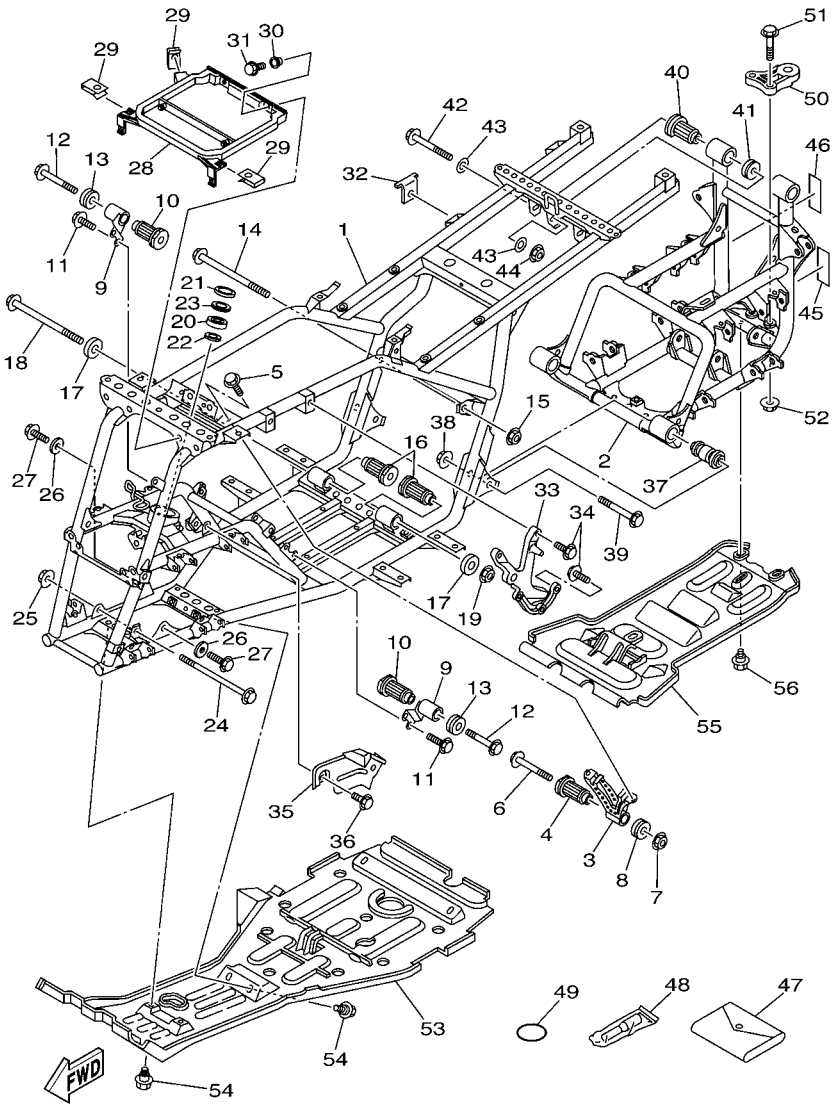

FIG. 21 FRAME

REF. NO.	PART NO.	DESCRIPTION	USA	CAN	EUR			REMARKS
55	1D9–F840K–01	GUARD COMP.	1	1	1			
56	90109–063F1	BOLT	3	3	3			

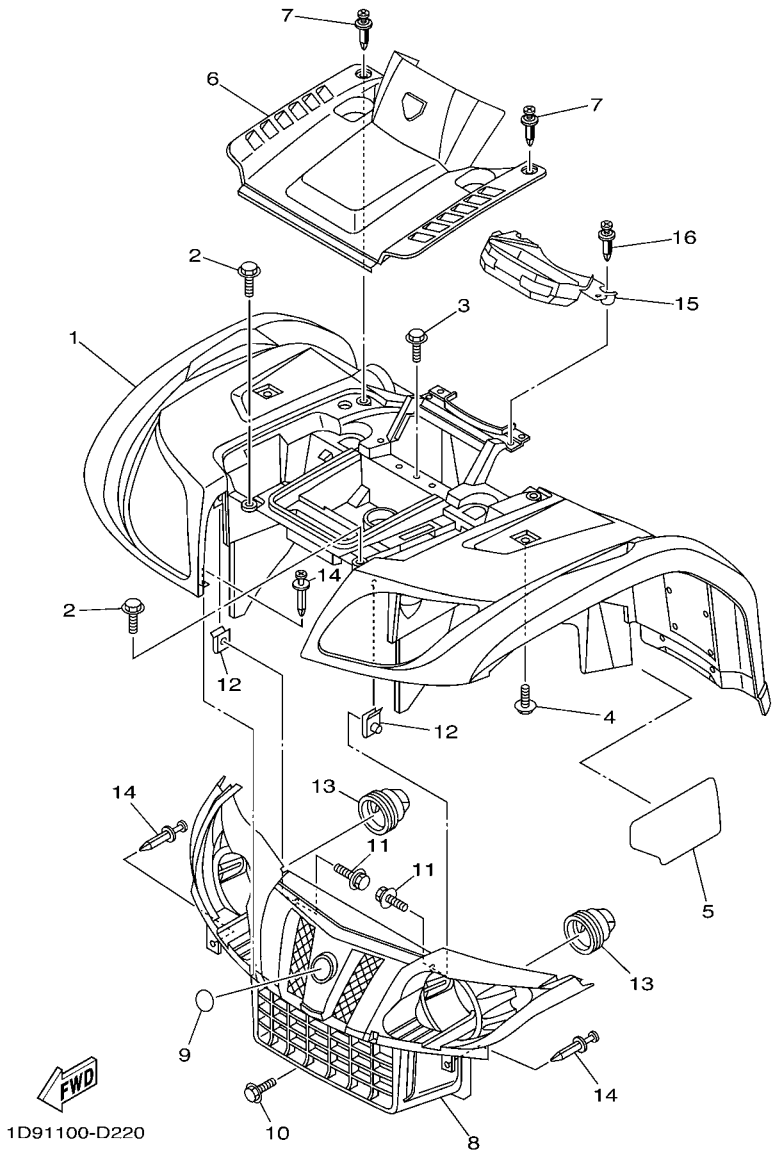

FIG. 22 FRONT FENDER

REF. NO.	PART NO.	DESCRIPTION	USA	CAN	EUR			REMARKS
1	1D9–F1500–H1	FRONT FENDER ASSY	1					
	1D9–F1500–J1	FRONT FENDER ASSY		1				
	1D9–F1500–K1	FRONT FENDER ASSY			1			
2	90119–06060	BOLT, WITH WASHER	2	2	2			
3	90119–06060	BOLT, WITH WASHER	1	1	1			
4	90119–06060	BOLT, WITH WASHER	2	2	2			
5	5ND–F1575–00	SEAL 1	1	1	1			
6	5ND–F3391–10	PANEL, FRONT	1	1	1			
7	90269–06800	RIVET	2	2	2			
8	1D9–F8309–01	GRILLE, FRONT	1		1			
	1D9–F8309–11	GRILLE, FRONT		1				
9	5FU–F175B–01	TUNING FORK MARK	1	1	1			
10	90119–06060	BOLT, WITH WASHER	2	2	2			
11	90119–06060	BOLT, WITH WASHER	2	2	2			
12	90183–06053	NUT, SPRING	2	2	2			
13	5UH–F8349–00	CAP	2	2	2			
14	90269–06804	RIVET	4	4	4			
15	5ND–F837L–01	PANEL, CONSOLE 1	1	1	1			
16	90269–06800	RIVET	4	4	4			

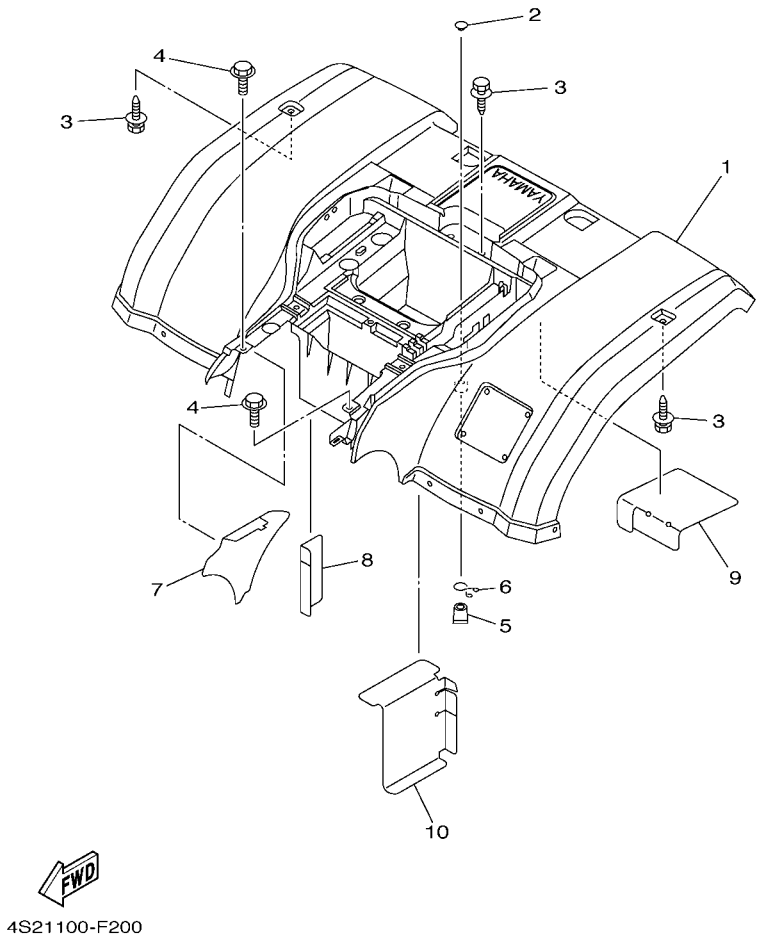

FIG. 23 REAR FENDER

REF. NO.	PART NO.	DESCRIPTION	USA	CAN	EUR			REMARKS
1	5ND–F1600–L1	REAR FENDER ASSY.	1	1				
	5ND–F1600–M1	REAR FENDER ASSY.			1			
2	90338–09801	PLUG	1	1	1			
3	90119–06060	BOLT, WITH WASHER	3	3	3			
4	90119–06227	BOLT, WITH WASHER	2	2	2			
5	5BF–1443E–00	PIPE, DRAIN	1	1	1			
6	90467–16195	CLIP	1	1	1			
7	5ND–F163A–02	COVER, REAR FENDER 1	1	1	1			
8	5ND–F163E–00	COVER, REAR FENDER 2	1	1	1			
9	5ND–F1652–00	PROTECTOR	1	1	1			
10	5ND–F163F–00	COVER, REAR FENDER 3	1	1	1			

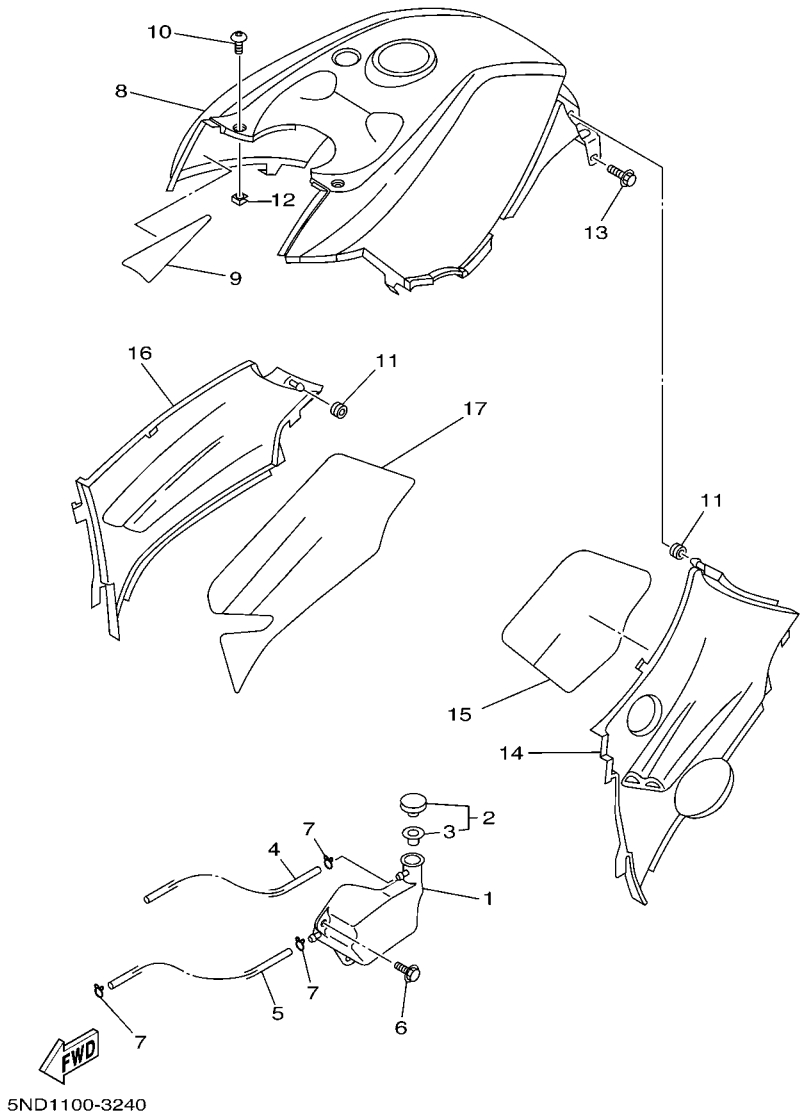

FIG. 24 SIDE COVER

REF. NO.	PART NO.	DESCRIPTION	USA	CAN	EUR			REMARKS
1	5ND–F1871–00	TANK, RECOVERY	1	1	1			
2	1AA–21815–00	CAP	1	1	1			
3	1AA–21874–00	.GASKET	1	1	1			
4	90445–08811	HOSE (L1020)	1	1	1			
5	90445–08812	HOSE (L730)	1	1	1			
6	90119–06060	BOLT, WITH WASHER	2	2	2			
7	90467–08003	CLIP	3	3	3			
8	5ND–F171C–B0	TOP COVER COMP.	1	1	1			
9	5ND–F174M–00	CLOTH, PROTECTOR	1	1	1			
10	90110–05201	BOLT, HEXAGON SOCKET HEAD	2	2	2			
11	90480–13567	GROMMET	2	2	2			
12	90183–05024	NUT, SPRING	2	2	2			
13	90119–06079	BOLT, WITH WASHER	2	2	2			
14	5ND–F1710–B0	SIDE COVER ASSY 1	1	1	1			
15	5ND–F174A–01	INSULATOR, SIDE COVER	1	1	1			
16	5ND–F1720–B0	SIDE COVER ASSY 2	1	1	1			
17	5ND–F174T–01	INSULATOR, SIDE COVER 2	1	1	1			

FIG. 25 REAR ARM

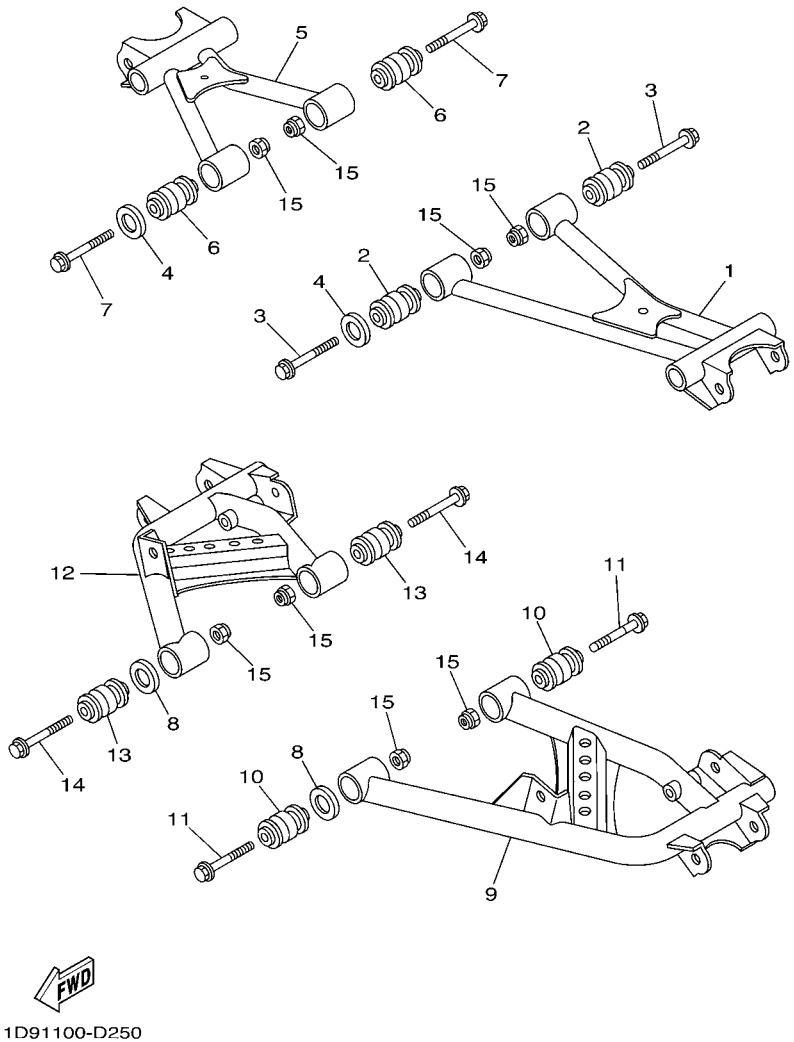

REF. NO.	PART NO.	DESCRIPTION	USA	CAN	EUR			REMARKS
1	1D9–F2171–00	ARM, REAR 1	1	1	1			
2	5KM–23526–00	BUSH	2	2	2			
3	90105–10323	BOLT, FLANGE	2	2	2			
4	5KM–22149–00	WASHER	2	2	2			
5	1D9–F2172–00	ARM, REAR 2	1	1	1			
6	5KM–23526–00	BUSH	2	2	2			
7	90105–10323	BOLT, FLANGE	2	2	2			
8	5KM–22149–00	WASHER	2	2	2			
9	1D9–F217M–00	ARM 1	1	1	1			
10	5KM–23526–00	BUSH	2	2	2			
11	90105–10323	BOLT, FLANGE	2	2	2			
12	1D9–F217N–00	ARM 2	1	1	1			
13	5KM–23526–00	BUSH	2	2	2			
14	90105–10323	BOLT, FLANGE	2	2	2			
15	90185–10844	NUT, SELF-LOCKING	8	8	8			

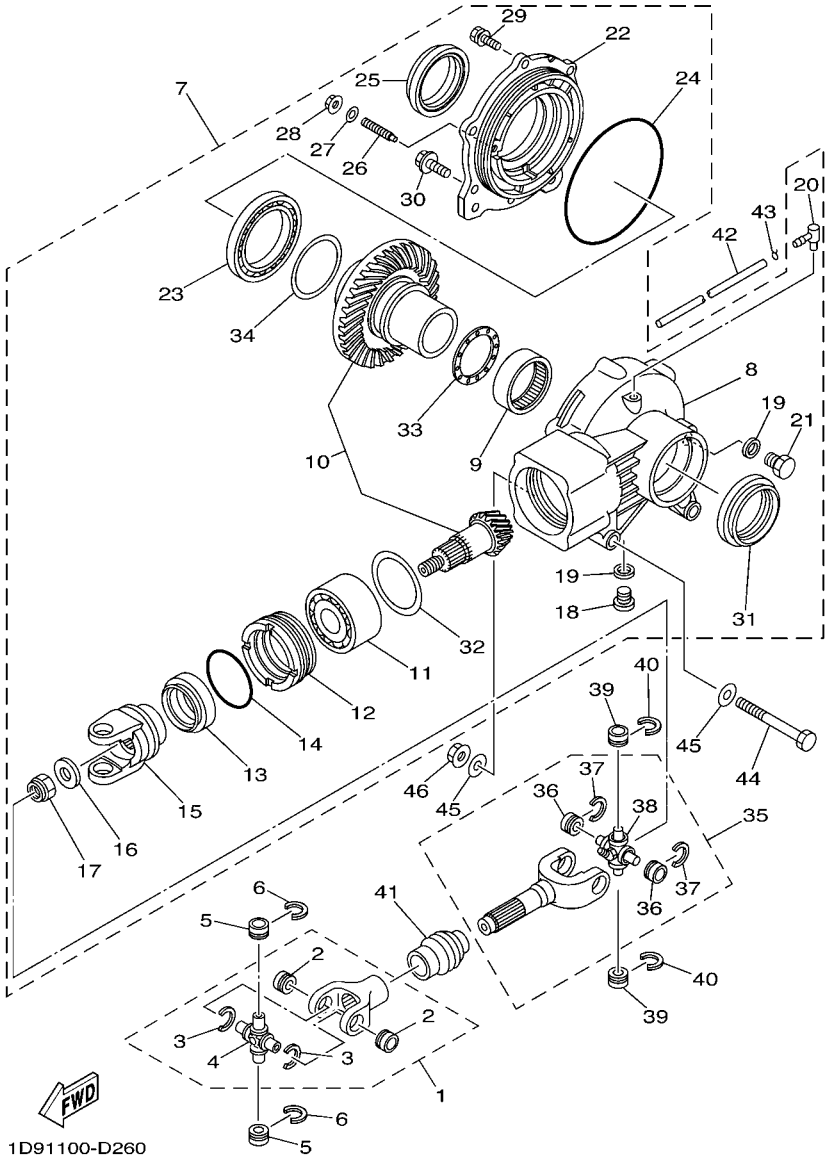

FIG. 26 DRIVE SHAFT

REF. NO.	PART NO.	DESCRIPTION	USA	CAN	EUR			REMARKS
1	1D9–46108–00	CROSS JOINT COMP. 3	1	1	1			
2	93399–99948	.BEARING	2	2	2			
3	93440–20088	.CIRCLIP	2	2	2			
4	5GT–46187–00	.SPIDER	1	1	1			
5	93399–99948	BEARING	2	2	2			
6	93440–20088	CIRCLIP	2	2	2			
7	1D9–G6101–00	REAR AXLE GEAR CASE ASSY	1	1	1			
8	1D9–G6151–00	.HOUSING, DRIVE SHAFT	1	1	1			
9	93317–855Y9	.BEARING	1	1	1			
10	1D9–461A0–00	.RING GEAR SET	1	1	1			
11	93305–005Y0	.BEARING	1	1	1			
12	1D9–44583–00	.NUT	1	1	1			
13	93102–44454	.OIL SEAL	1	1	1			
14	93210–626A7	.O-RING	1	1	1			
15	1D9–46186–00	.YOKE, JOINT	1	1	1			
16	90201–14633	.WASHER, PLATE	1	1	1			
17	90185–14070	.NUT, SELF-LOCKING	1	1	1			
18	90340–14046	.PLUG, STRAIGHT SCREW	1	1	1			
19	214–11198–01	.GASKET	2	2	2			
20	5UG–15371–00	.BREATHER	1	1	1			
21	90340–14029	.PLUG, STRAIGHT SCREW	1	1	1			
22	1D9–G6152–00	.HOUSING, BEARING	1	1	1			
23	93316–013Y0	.BEARING	1	1	1			
24	93211–39569	.O-RING	1	1	1			
25	93102–60800	.OIL SEAL	1	1	1			
26	2HR–46156–00	.STOPPER, RING GEAR	1	1	1			
27	90201–08087	.WASHER, PLATE	1	1	1			

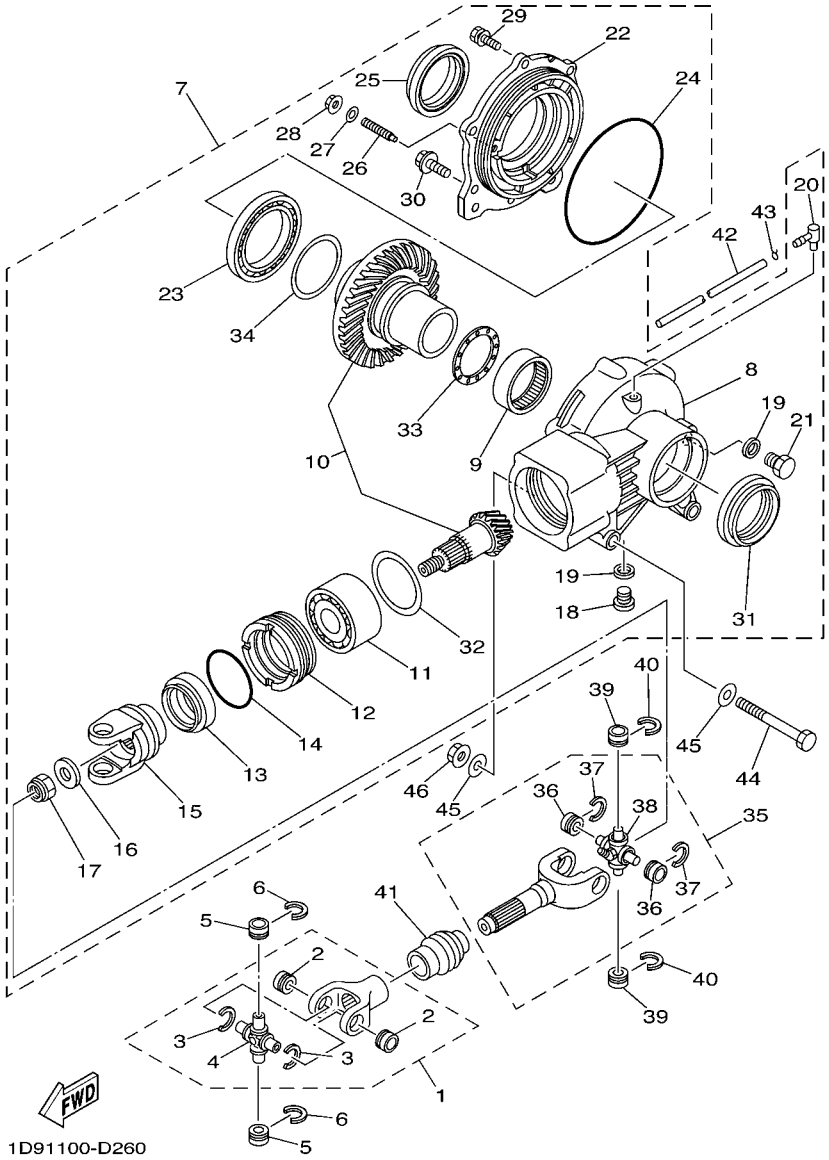

FIG. 26 DRIVE SHAFT

REF. NO.	PART NO.	DESCRIPTION	USA	CAN	EUR			REMARKS
28	95707–08500	.NUT, FLANGE	1	1	1			
29	9752P–08525	.BOLT, WITH WASHER	4	4	4			
30	95817–10025	.BOLT, FLANGE	2	2	2			
31	93102–60800	.OIL SEAL	1	1	1			
32	1D9–G6119–00	.SHIM, THRUST(T=0.15MM)	1	1	1			UR
	1D9–G6119–10	.SHIM, THRUST(T=0.30MM)	1	1	1			UR
	1D9–G6119–20	.SHIM, THRUST(T=0.40MM)	1	1	1			UR
	1D9–G6119–30	.SHIM, THRUST(T=0.45MM)	1	1	1			UR
	1D9–G6119–40	.SHIM, THRUST(T=0.50MM)	1	1	1			UR
33	4XE–G6118–10	.SHIM, THRUST(T=1.0MM)	1	1	1			UR
	4XE–G6118–11	.SHIM, THRUST(T=1.1MM)	1	1	1			UR
	4XE–G6118–12	.SHIM, THRUST(T=1.2MM)	1	1	1			UR
	4XE–G6118–13	.SHIM, THRUST(T=1.3MM)	1	1	1			UR
	4XE–G6118–14	.SHIM, THRUST(T=1.4MM)	1	1	1			UR
	4XE–G6118–15	.SHIM, THRUST(T=1.5MM)	1	1	1			UR
	4XE–G6118–16	.SHIM, THRUST(T=1.6MM)	1	1	1			UR
	4XE–G6118–17	.SHIM, THRUST(T=1.7MM)	1	1	1			UR
	4XE–G6118–18	.SHIM, THRUST(T=1.8MM)	1	1	1			UR
	4XE–G6118–19	.SHIM, THRUST(T=1.9MM)	1	1	1			UR
	4XE–G6118–20	.SHIM, THRUST(T=2.0MM)	1	1	1			UR
	4XE–G6118–21	.SHIM, THRUST(T=2.1MM)	1	1	1			UR
34	4XE–G6117–25	.SHIM, RING GEAR(T=0.25MM)	1	1	1			UR
	4XE–G6117–30	.SHIM, RING GEAR(T=0.30MM)	1	1	1			UR
	4XE–G6117–35	.SHIM, RING GEAR(T=0.35MM)	1	1	1			UR
	4XE–G6117–40	.SHIM, RING GEAR(T=0.40MM)	1	1	1			UR
	4XE–G6117–45	.SHIM, RING GEAR(T=0.45MM)	1	1	1			UR
	4XE–G6117–50	.SHIM, RING GEAR(T=0.50MM)	1	1	1			UR

FIG. 26 DRIVE SHAFT

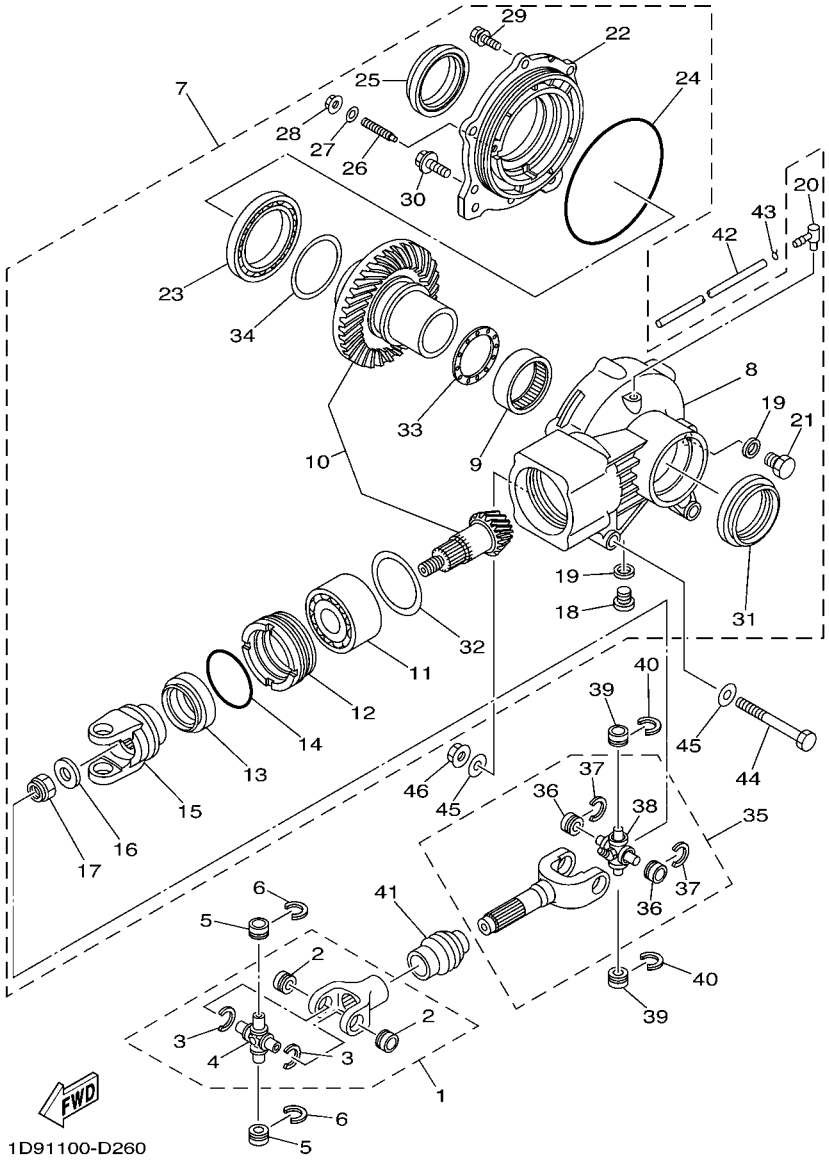

REF. NO.	PART NO.	DESCRIPTION	USA	CAN	EUR			REMARKS
35	1D9–46107–00	CROSS JOINT COMP. 2	1	1	1			
36	93399–99948	.BEARING	2	2	2			
37	93440–20088	.CIRCLIP	2	2	2			
38	5GT–46187–00	.SPIDER	1	1	1			
39	93399–99948	BEARING	2	2	2			
40	93440–20088	CIRCLIP	2	2	2			
41	5GT–46136–00	SEAL 1	1	1	1			
42	90445–078C4	HOSE (L900)	1	1	1			
43	90467–07029	CLIP	1	1	1			
44	90105–10111	BOLT, FLANGE	1	1	1			
45	90201–10131	WASHER, PLATE	4	4	4			
46	95607–10200	NUT, U FLANGE	2	2	2			

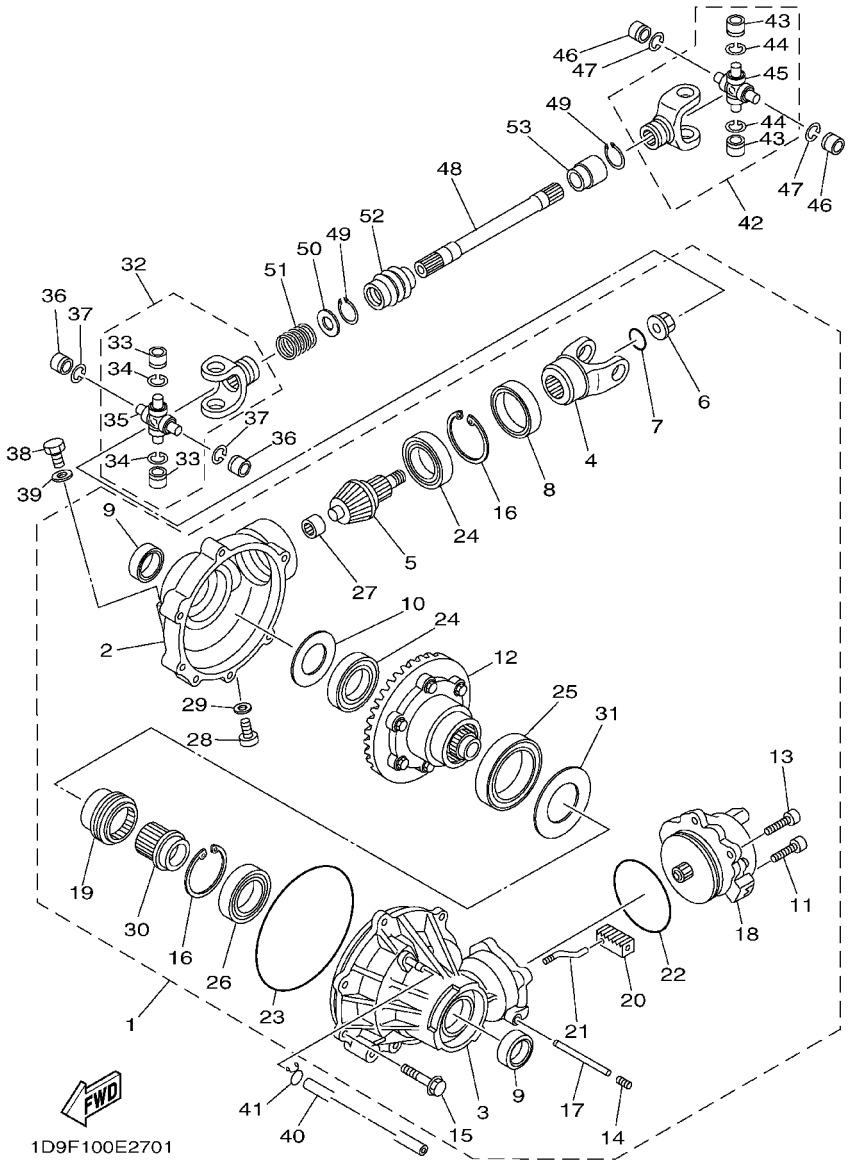

FIG. 27 FRONT DIFFERENTIAL

REF. NO.	PART NO.	DESCRIPTION	USA	CAN	EUR			REMARKS
1	5KM–46160–06	FRONT AXLE GEAR CASE COMP.	1	1	1			
2	5KM–46161–00	.HOUSING, SHAFT DRIVE 2	1	1	1			
3	5KM–46162–00	.HOUSING, BEARING 2	1	1	1			
4	5KM–46146–11	.YOKE, JOINT 2	1	1	1			
5	5KM–46141–13	.PINION, DRIVE 2	1	1	1			
6	4WV–46145–10	.NUT 1	1	1	1			
7	93210–14359	.O-RING	1	1	1			
8	93105–46001	.OIL SEAL	1	1	1			
9	93102–24034	.OIL SEAL	2	2	2			
10	4WV–46119–01	.SHIM, THRUST (0.1T)	1	1	1			UR
	4WV–46119–11	.SHIM, THRUST (0.2T)	1	1	1			UR
	4WV–46119–21	.SHIM, THRUST (0.3T)	1	1	1			UR
	4WV–46119–31	.SHIM, THRUST (0.4T)	1	1	1			UR
	4WV–46119–41	.SHIM, THRUST (0.5T)	1	1	1			UR
	4WV–46119–51	.SHIM, THRUST (1.0T)	1	1	1			UR
11	5KM–46155–00	.BOLT 1	1	1	1			
12	5KM–46470–12	.LIMITED SLIP DIFF. ASSY	1	1	1			
13	91317–08020	.BOLT	2	2	2			
14	90113–08004	.BOLT, SET	1	1	1			
15	4WV–46159–00	.BOLT 3	6	6	6			
16	5KM–46143–00	.RING,HOLE SNAP 2	2	2	2			
17	5KM–42752–00	.SHAFT	1	1	1			
18	5KM–4616A–02	.SERVO MOTOR COMP	1	1	1			
19	5KM–46441–00	.CLUTCH,DRIVEN	1	1	1			
20	5KM–18319–00	.SHAFT 2	1	1	1			
21	5KM–18514–00	.FORK, SHIFT 4	1	1	1			
22	93210–82001	.O-RING	1	1	1			

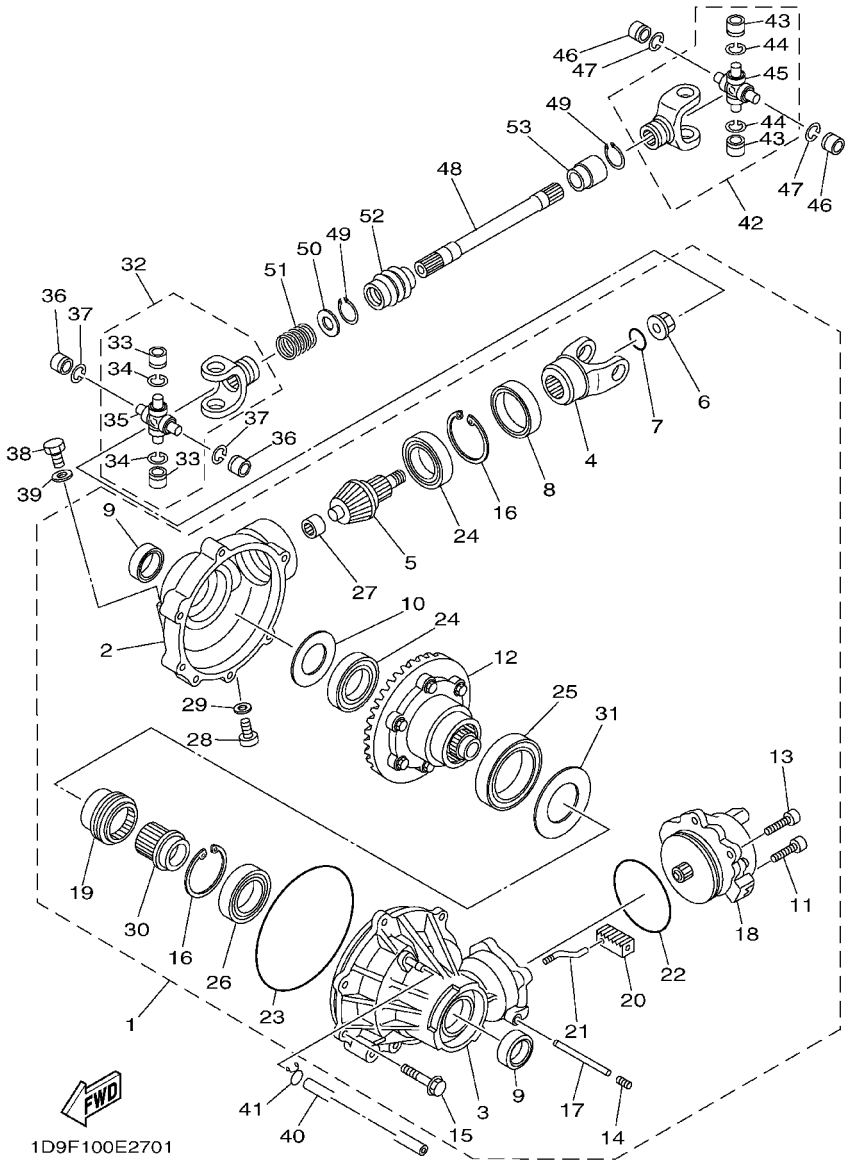

FIG. 27 FRONT DIFFERENTIAL

REF. NO.	PART NO.	DESCRIPTION	USA	CAN	EUR			REMARKS
23	93211–40040	.O-RING	1	1	1			
24	93306–00709	.BEARING	2	2	2			
25	93306–91201	.BEARING	1	1	1			
26	93316–00702	.BEARING	1	1	1			
27	4WV–46167–00	.BEARING 4	1	1	1			
28	90340–10001	.PLUG, STRAIGHT SCREW	1	1	1			
29	90430–10003	.GASKET	1	1	1			
30	5KM–46451–00	.ADAPTER	1	1	1			
31	5KM–46119–01	.SHIM, THRUST (0.1T)	1	1	1			UR
	5KM–46119–11	.SHIM, THRUST (0.2T)	1	1	1			UR
	5KM–46119–21	.SHIM, THRUST (0.3T)	1	1	1			UR
	5KM–46119–31	.SHIM, THRUST (0.4T)	1	1	1			UR
	5KM–46119–41	.SHIM, THRUST (0.5T)	1	1	1			UR
	5KM–46119–51	.SHIM, THRUST (1.0T)	1	1	1			UR
	5KM–46119–61	.SHIM, THRUST (1.5T)	1	1	1			UR
32	5KM–46107–00	CROSS JOINT COMP. 2	1	1	1			
33	93399–99948	.BEARING	2	2	2			
34	93440–20088	.CIRCLIP	2	2	2			
35	5GT–46187–00	.SPIDER	1	1	1			
36	93399–99948	BEARING	2	2	2			
37	93440–20088	CIRCLIP	2	2	2			
38	90340–14029	PLUG, STRAIGHT SCREW	1	1	1			
39	214–11198–01	GASKET	1	1	1			
40	90445–07809	HOSE (L750)	1	1	1			
41	90467–07029	CLIP	1	1	1			
42	5KM–46107–00	CROSS JOINT COMP. 2	1	1	1			
43	93399–99948	.BEARING	2	2	2			

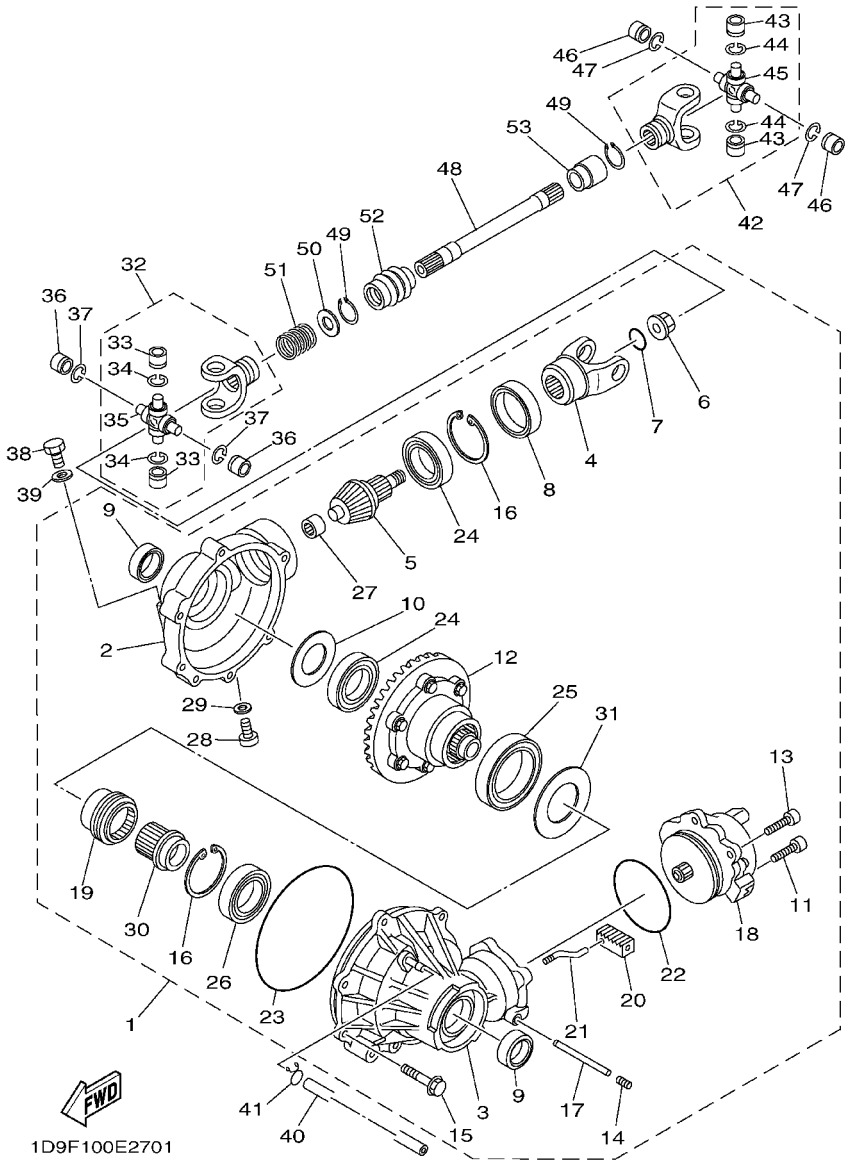

FIG. 27 FRONT DIFFERENTIAL

REF. NO.	PART NO.	DESCRIPTION	USA	CAN	EUR			REMARKS
44	93440–20088	.CIRCLIP	2	2	2			
45	5GT–46187–00	.SPIDER	1	1	1			
46	93399–99948	BEARING	2	2	2			
47	93440–20088	CIRCLIP	2	2	2			
48	5ND–G6173–00	SHAFT, DRIVE 2	1	1	1			
49	99009–19400	CIRCLIP	2	2	2			
50	90201–20266	WASHER, PLATE (T=1.0)	1	1	1			
51	90501–235L9	SPRING, COMPRESSION	1	1	1			
52	5GT–46136–00	SEAL 1	1	1	1			
53	5GT–46137–00	SEAL 2	1	1	1			

FIG. 28 REAR SUSPENSION

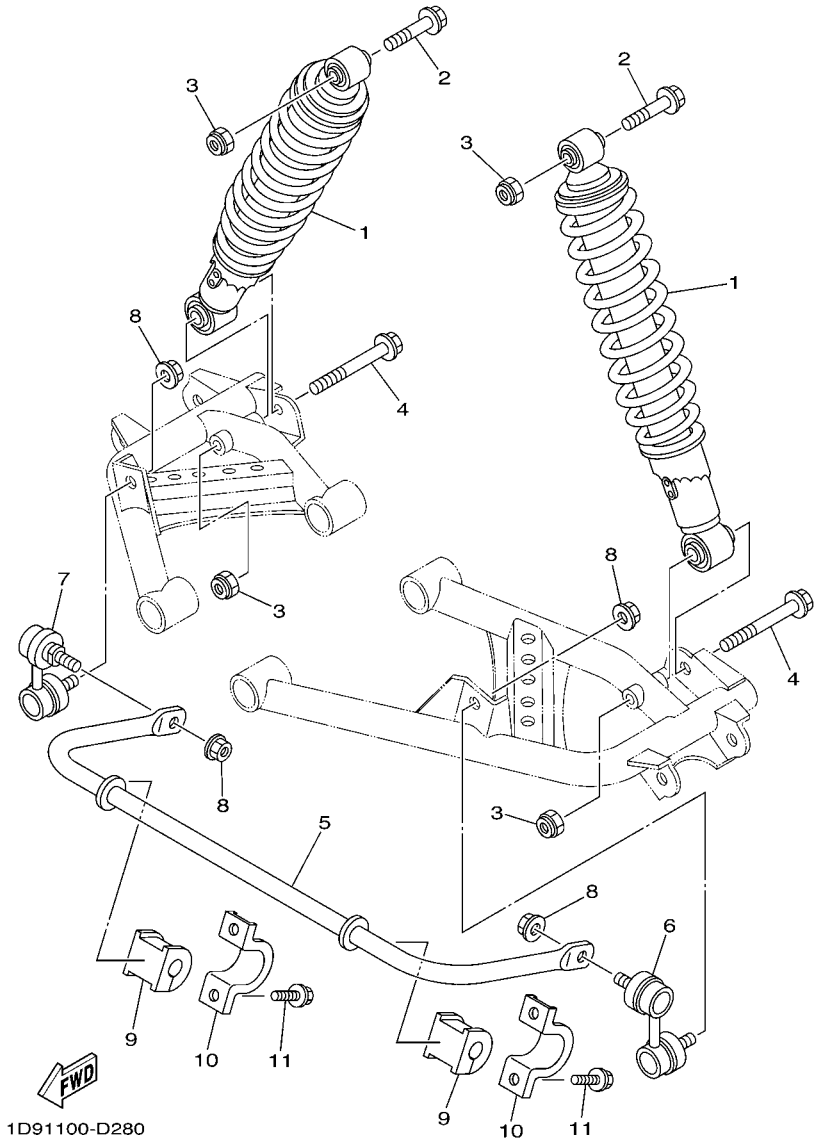

REF. NO.	PART NO.	DESCRIPTION	USA	CAN	EUR			REMARKS
1	1D9–F2210–21	SHOCK ABSORBER ASSY, REAR	2	2	2			
2	90105–108B1	BOLT, FLANGE	2	2	2			
3	90185–10844	NUT, SELF-LOCKING	4	4	4			
4	90105–10095	BOLT, FLANGE	2	2	2			
5	1D9–G7491–00	BAR, STABILIZER	1	1	1			
6	5KM–2385L–01	JOINT, STABILIZER 1	1	1	1			
7	5KM–2385M–01	JOINT, STABILIZER 2	1	1	1			
8	95607–10200	NUT, U FLANGE	4	4	4			
9	1D9–F386G–00	BUSH, STABILIZER FRONT	2	2	2			
10	1D9–F386H–00	COVER, STABILIZER FRONT	2	2	2			
11	95817–08012	BOLT, FLANGE	4	4	4			

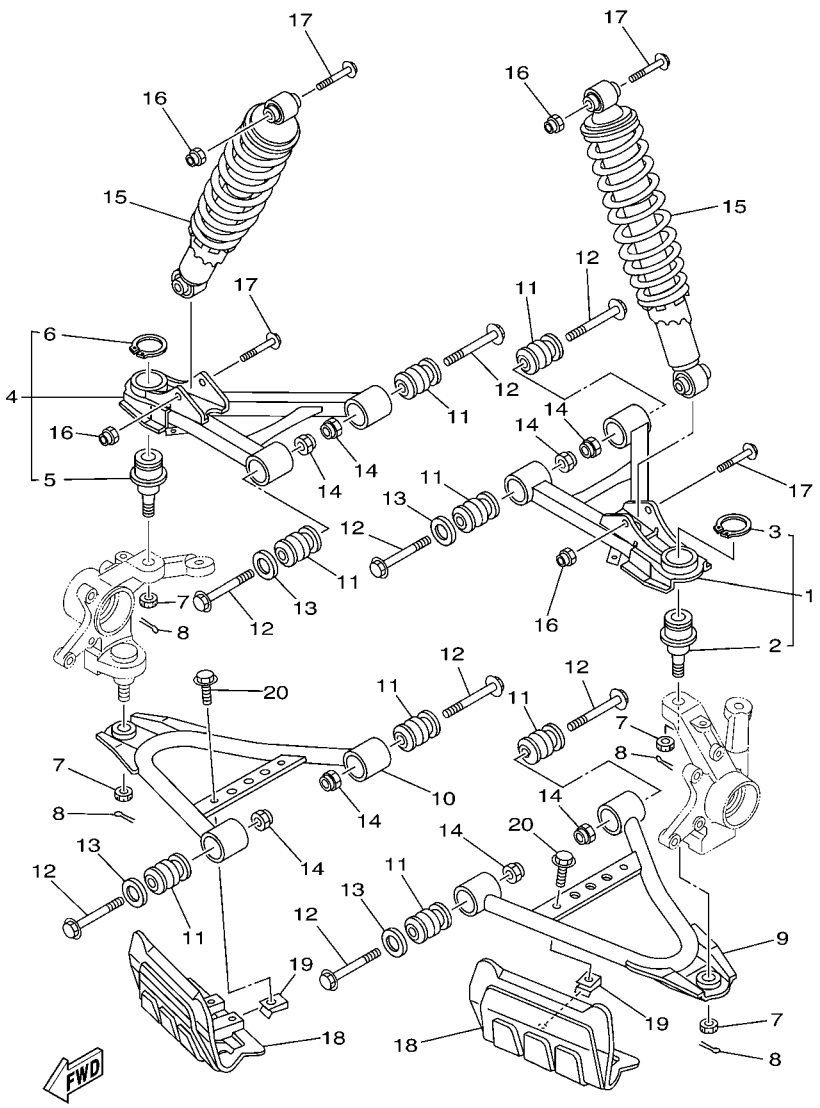

1D91100-D290

FIG. 29 FRONT SUSPENSION & WHEEL

REF. NO.	PART NO.	DESCRIPTION	USA	CAN	EUR			REMARKS
1	5ND–F3540–12	FRONT UPPER ARM COMP. (LEFT)	1	1	1			
2	5FU–F3549–00	.BALL JOINT 1	1	1	1			
3	93410–32826	.CIRCLIP	1	1	1			
4	5ND–F3550–12	FRONT UPPER ARM COMP. (RIGHT)	1	1	1			
5	5FU–F3549–00	.BALL JOINT 1	1	1	1			
6	93410–32826	.CIRCLIP	1	1	1			
7	90171–12816	NUT, CASTLE	4	4	4			
8	91401–25020	PIN, COTTER	4	4	4			
9	1D9–F357A–00	ARM,FR. LWR. LH.	1	1	1			
10	1D9–F358A–00	ARM,FR. LWR. RH.	1	1	1			
11	2HR–23526–00	BUSH	8	8	8			
12	90105–10890	BOLT, FLANGE	8	8	8			
13	5KM–22149–00	WASHER	4	4	4			
14	90185–10844	NUT, SELF-LOCKING	8	8	8			
15	1D9–F3350–20	SHOCK ABSORBER ASSY	2	2	2			
16	90185–10844	NUT, SELF-LOCKING	4	4	4			
17	90105–108B1	BOLT, FLANGE	4	4	4			
18	5ND–F3123–00	COVER, LOWER 1	2	2	2			
19	90183–06053	NUT, SPRING	2	2	2			
20	95807–06012	BOLT, FLANGE	2	2	2			

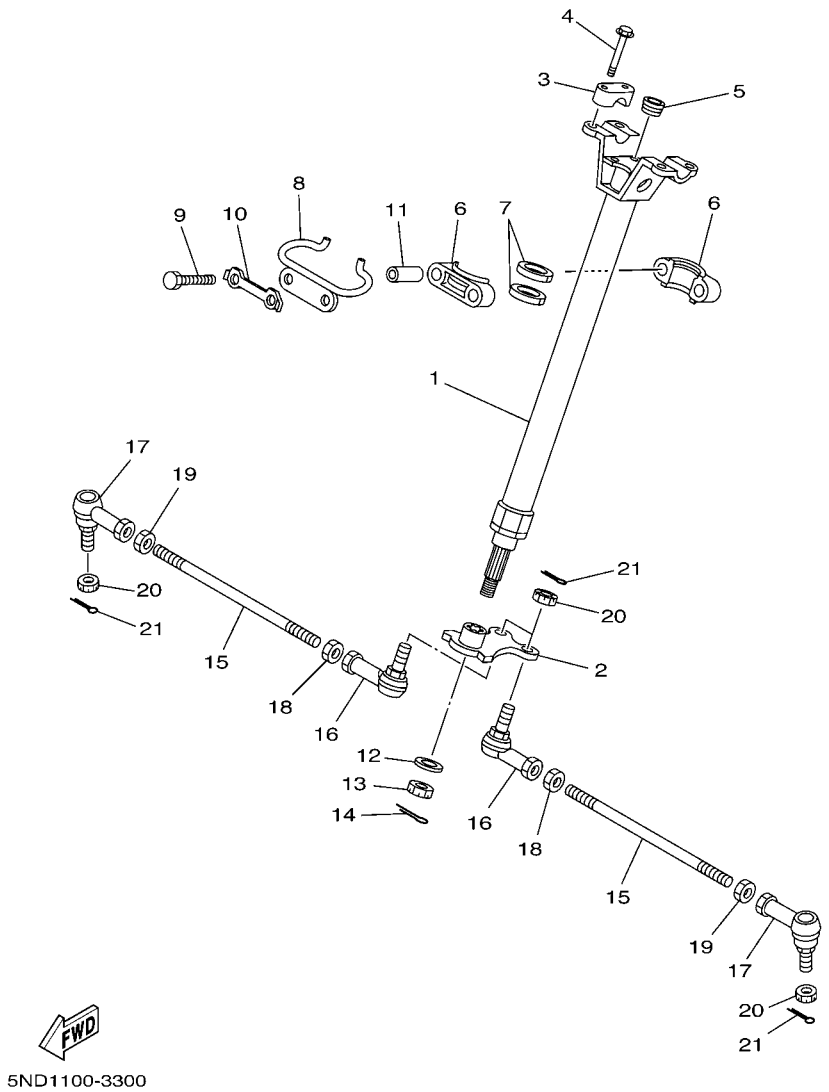

FIG. 30 STEERING

REF. NO.	PART NO.	DESCRIPTION	USA	CAN	EUR			REMARKS
1	5ND–F3813–10	COLUMN, STEERING 2	1	1	1			
2	5ND–F3816–11	ARM, PITMAN	1	1	1			
3	8K1–23814–00	HOLDER, HANDLE	2	2	2			
4	9581P–08030	BOLT, FLANGE	4	4	4			
5	90336–28053	PLUG, TAPER	1	1	1			
6	1UY–23812–00	PLANE BEARING, STEERING	2	2	2			
7	93112–31011	OIL SEAL	2	2	2			
8	5ND–F3868–00	BRACKET, STEERING LOWER	1	1	1			
9	9702P–08060	BOLT	2	2	2			
10	4XE–F3894–00	WASHER, LOCK 1	1	1	1			
11	90387–090R0	COLLAR	2	2	2			
12	90201–14226	WASHER, PLATE	1	1	1			
13	90185–14070	NUT, SELF-LOCKING	1	1	1			
14	91401–20025	PIN, COTTER	1	1	1			
15	5ND–F3831–00	ROD, TIE	2	2	2			
16	1D9–F3841–01	JOINT, UNIVERSAL 1	2	2	2			
17	1D9–F3845–01	JOINT, UNIVERSAL 2	2	2	2			
18	4XE–F3833–00	NUT 1	2	2	2			
19	4XE–F3834–00	NUT 2	2	2	2			
20	90171–12816	NUT, CASTLE	4	4	4			
21	91401–25020	PIN, COTTER	4	4	4			

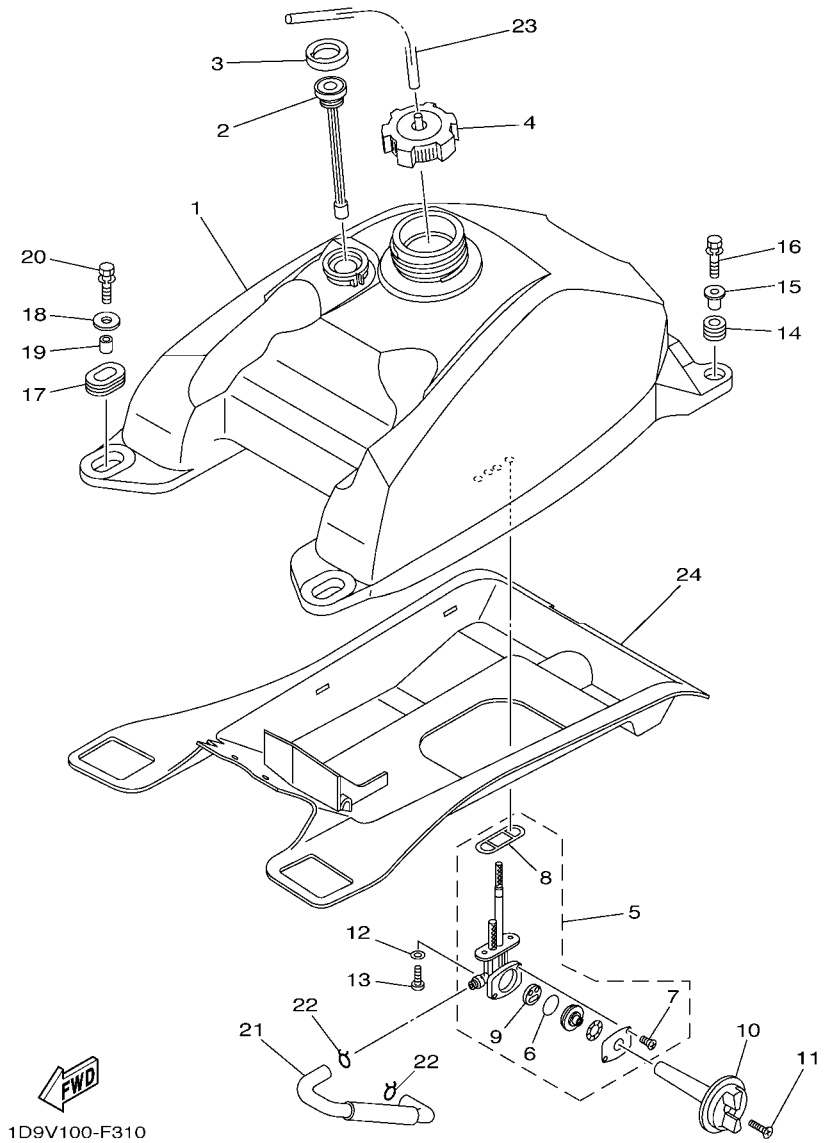

FIG. 31 FUEL TANK

REF. NO.	PART NO.	DESCRIPTION	USA	CAN	EUR			REMARKS
1	5ND–F4110–00	FUEL TANK COMP.	1	1	1			
2	5GH–24260–00	FUEL METER ASSY	1	1	1			
3	4SH–24261–00	HOUSING, FUEL METER	1	1	1			
4	5KM–24610–00	CAP ASSY	1	1	1			
5	5GH–24500–01	FUEL COCK ASSY 1	1	1	1			
6	3AJ–24534–01	.SEAL, COCK	1	1	1			
7	98507–03014	.SCREW, PAN HEAD	2	2	2			
8	4X8–24512–00	.O-RING	1	1	1			
9	3AC–24523–00	.VALVE PACKING	1	1	1			
10	5GH–24524–00	LEVER, COCK	1	1	1			
11	98707–04018	SCREW, FLAT HEAD	1	1	1			
12	90202–05193	WASHER, PLATE	2	2	2			
13	90149–06011	SCREW	2	2	2			
14	90480–18290	GROMMET	2	2	2			
15	90387–066J1	COLLAR	2	2	2			
16	90119–06831	BOLT, WITH WASHER	2	2	2			
17	90480–01400	GROMMET	2	2	2			
18	90201–060L5	WASHER, PLATE	2	2	2			
19	90387–07598	COLLAR	2	2	2			
20	90119–06831	BOLT, WITH WASHER	2	2	2			
21	3C2–F4311–00	PIPE, FUEL 1	1	1	1			
22	90467–10008	CLIP	2	2	2			
23	90445–088C5	HOSE (L400)	1	1	1			
24	5ND–F414H–10	DAMPER, PLATE 1	1	1	1			

FIG. 32 SEAT

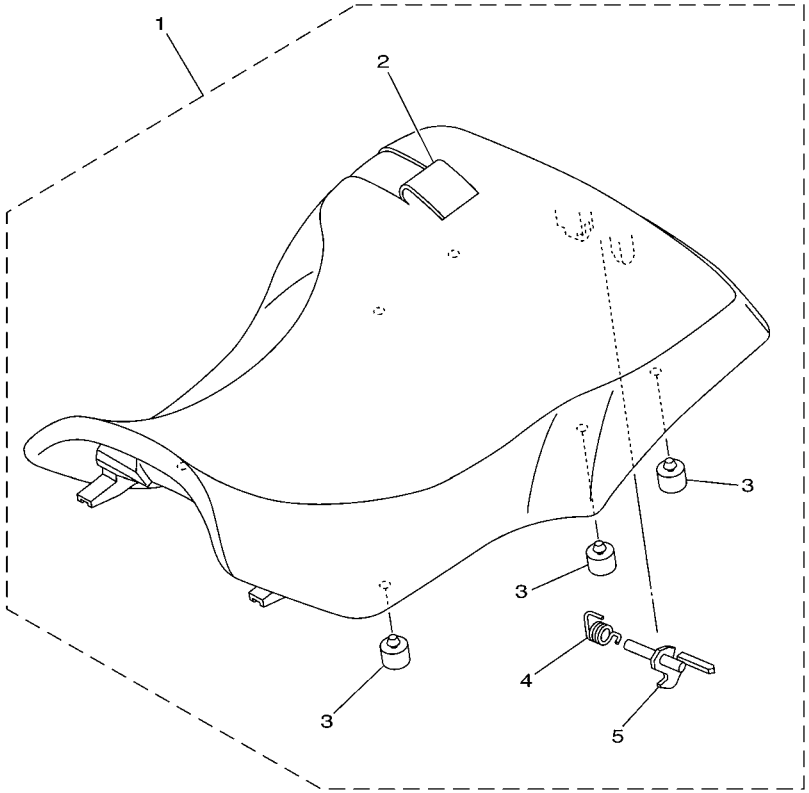

5ND1100-3320

REF. NO.	PART NO.	DESCRIPTION	USA	CAN	EUR			REMARKS
1	1D9–F4710–11	SINGLE SEAT ASSY	1	1				
	1D9–F4710–31	SINGLE SEAT ASSY			1			
2	5ND–F470F–30	.SEAT COVER COMP.	1	1				
	5ND–F470F–40	.SEAT COVER COMP.			1			
3	4XE–F4747–00	.DAMPER, SEAT	6	6	6			
4	4XE–F478V–00	.SPRING, TORSION	1	1	1			
5	5ND–F4776–00	.LEVER, SEAT	1	1	1			

FIG. 33 FRONT WHEEL

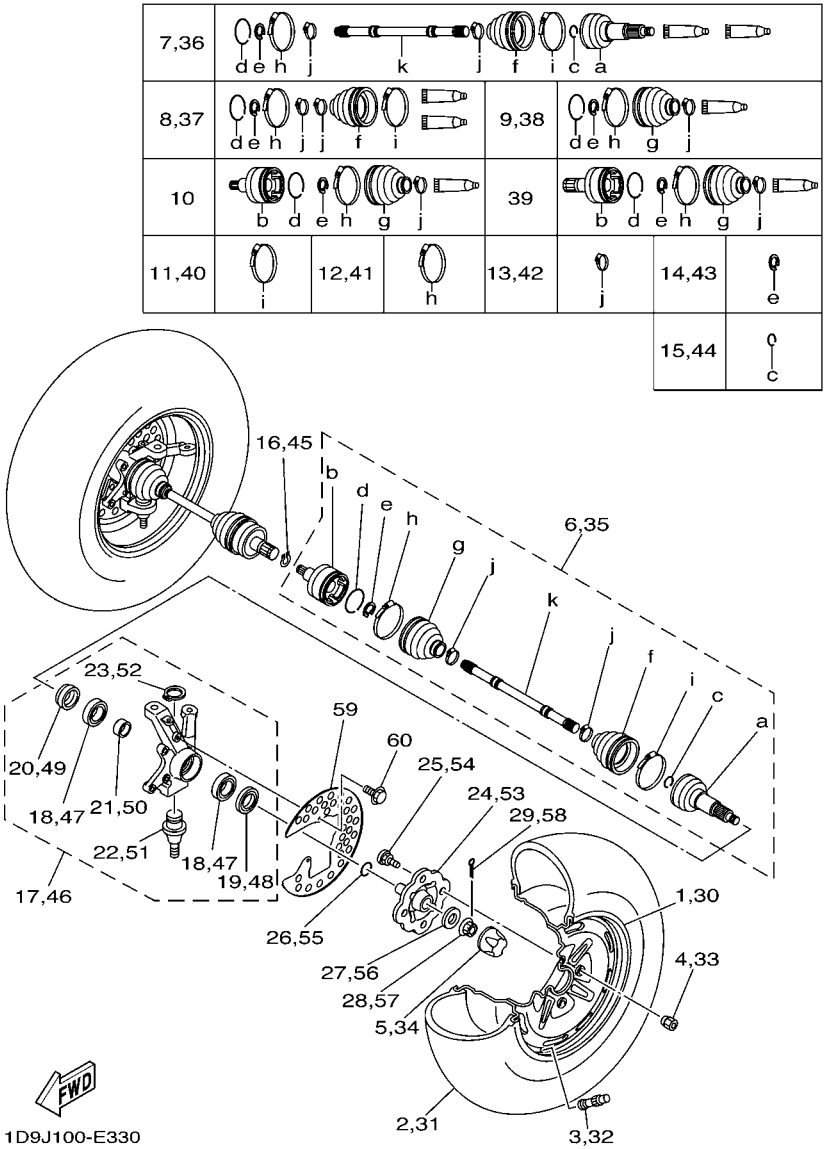

REF. NO.	PART NO.	DESCRIPTION	USA	CAN	EUR			REMARKS
1	1D9–F5180–20	WHEEL COMP.	1	1	1			
2	94108–12812	TIRE (AT25X8-12 M979)	1	1	1			CHENG SHIN
3	93900–00813	VALVE, RIM (TR413)	1	1	1			
4	90179–10540	NUT	4	4	4			
5	5GT–2512A–00	CAP, WHEEL	1	1	1			
6	5ND–F518F–00	DRIVE SHAFT ASSY	1	1	1			LH
7	5ND–F510F–00	.BALL JOINT SET	1	1	1			
8	5KM–2510G–00	.BOOT SET (BALL JOINT)	1	1	1			
9	5KM–2510H–00	.BOOT SET(DOUBLE OFFSET JOINT)	1	1	1			
10	5KM–2510J–00	.DOUBLE OFF SET JOINT	1	1	1			LH
11	3HN–2511G–01	.BOOT BAND (BALL JOINT)	1	1	1			
12	4KB–2511H–00	.BOOT BAND(DOUBLE OFFSETJOINT)	1	1	1			
13	3HN–2512G–01	.BOOT BAND (SMALL)	2	2	2			
14	2HR–2512J–00	.SNAP RING	1	1	1			
15	4KB–2512H–00	.CIRCLIP	1	1	1			
16	5KM–45531–10	CLIP, DRIVE SHAFT	1	1	1			
17	1D9–F3501–02	STEERING KNUCKLE ASSY (LEFT)	1	1	1			
18	93306–006Y2	.BEARING	2	2	2			
19	93106–38046	.OIL SEAL	1	1	1			
20	93106–38047	.OIL SEAL	1	1	1			
21	90387–30008	.COLLAR	1	1	1			
22	5FU–F3549–00	.BALL JOINT 1	1	1	1			
23	93410–32826	.CIRCLIP	1	1	1			
24	5ND–F5111–20	HUB, FRONT	1	1	1			
25	90114–10010	BOLT, SERRATION	4	4	4			
26	93210–27666	O-RING	1	1	1			
27	90201–168R1	WASHER, PLATE	1	1	1			

FIG. 33 FRONT WHEEL

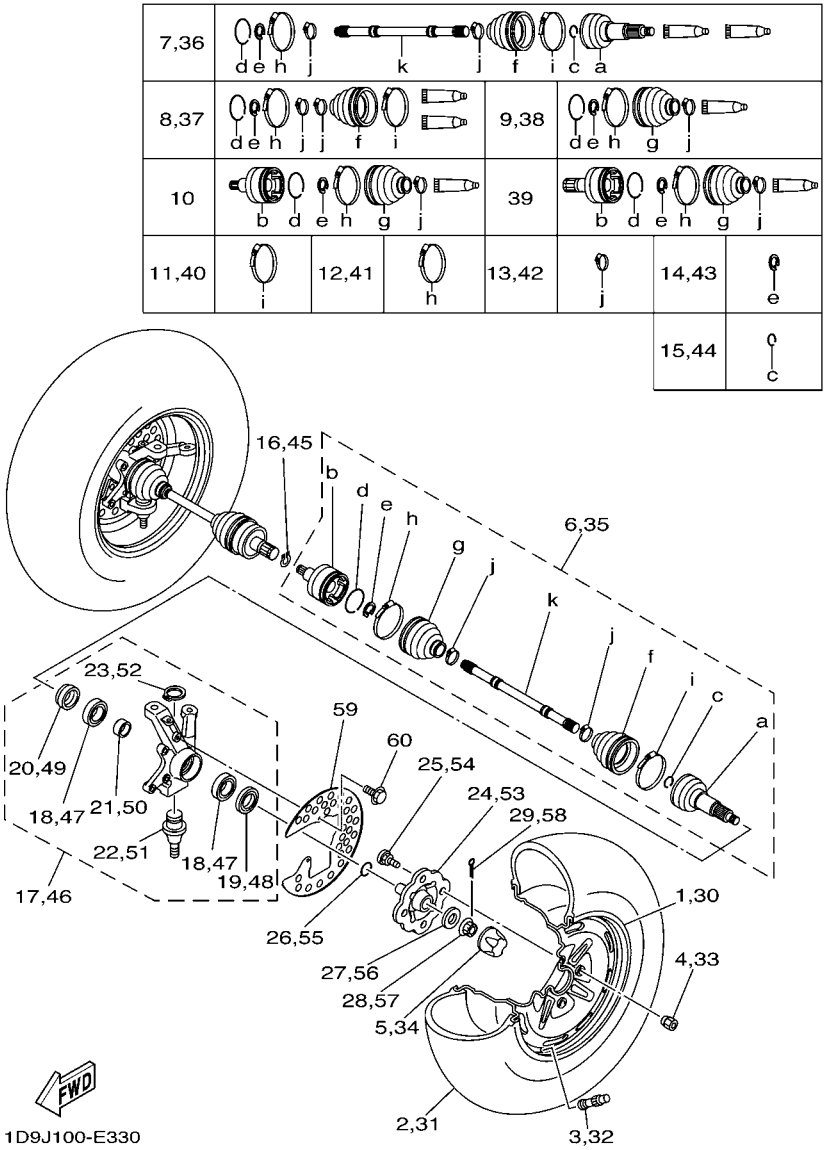

REF. NO.	PART NO.	DESCRIPTION	USA	CAN	EUR			REMARKS
28	90171–16001	NUT, CASTLE	1	1	1			
29	91401–30030	PIN, COTTER	1	1	1			
30	1D9–F5180–20	WHEEL COMP.	1	1	1			
31	94108–12812	TIRE (AT25X8-12 M979)	1	1	1			CHENG SHIN
32	93900–00813	VALVE, RIM (TR413)	1	1	1			
33	90179–10540	NUT	4	4	4			
34	5GT–2512A–00	CAP, WHEEL	1	1	1			
35	5ND–F518G–00	DRIVE SHAFT ASSY	1	1	1			RH
36	5ND–F510F–00	.BALL JOINT SET	1	1	1			
37	5KM–2510G–00	.BOOT SET (BALL JOINT)	1	1	1			
38	5KM–2510H–00	.BOOT SET(DOUBLE OFFSET JOINT)	1	1	1			
39	5KM–2510J–10	.DOUBLE OFF SET JOINT	1	1	1			RH
40	3HN–2511G–01	.BOOT BAND (BALL JOINT)	1	1	1			
41	4KB–2511H–00	.BOOT BAND(DOUBLE OFFSETJOINT)	1	1	1			
42	3HN–2512G–01	.BOOT BAND (SMALL)	2	2	2			
43	2HR–2512J–00	.SNAP RING	1	1	1			
44	4KB–2512H–00	.CIRCLIP	1	1	1			
45	93450–22119	CIRCLIP	1	1	1			
46	1D9–F3502–02	STEERING KNUCKLE ASSY (RIGHT)	1	1	1			
47	93306–006Y2	.BEARING	2	2	2			
48	93106–38046	.OIL SEAL	1	1	1			
49	93106–38047	.OIL SEAL	1	1	1			
50	90387–30008	.COLLAR	1	1	1			
51	5FU–F3549–00	.BALL JOINT 1	1	1	1			
52	93410–32826	.CIRCLIP	1	1	1			
53	5ND–F5111–20	HUB, FRONT	1	1	1			
54	90114–10010	BOLT, SERRATION	4	4	4			

FIG. 33 FRONT WHEEL

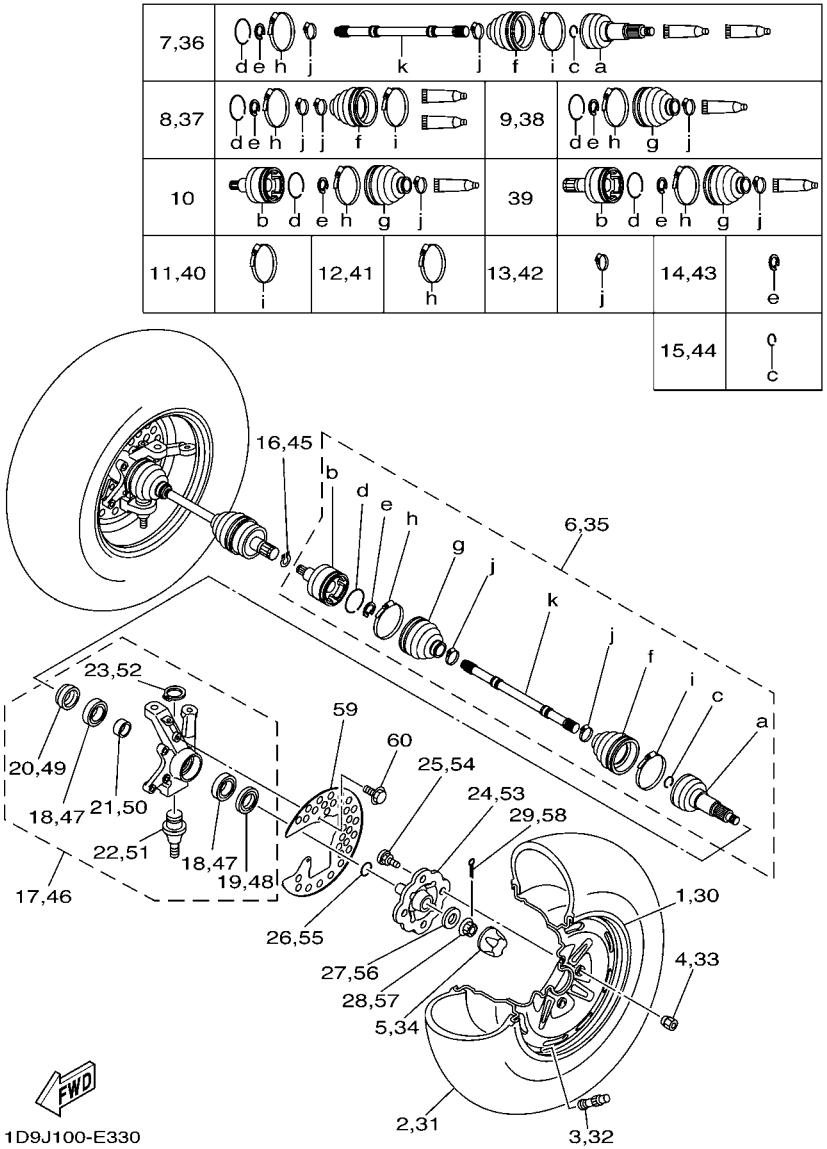

REF. NO.	PART NO.	DESCRIPTION	USA	CAN	EUR			REMARKS
55	93210–27666	O-RING	1	1	1			
56	90201–168R1	WASHER, PLATE	1	1	1			
57	90171–16001	NUT, CASTLE	1	1	1			
58	91401–30030	PIN, COTTER	1	1	1			
59	1D9–F514A–00	RING, WHEEL 1 (LEFT)	2	2	2			
60	9582P–06012	BOLT, FLANGE	4	4	4			

FIG. 34 FRONT BRAKE CALIPER

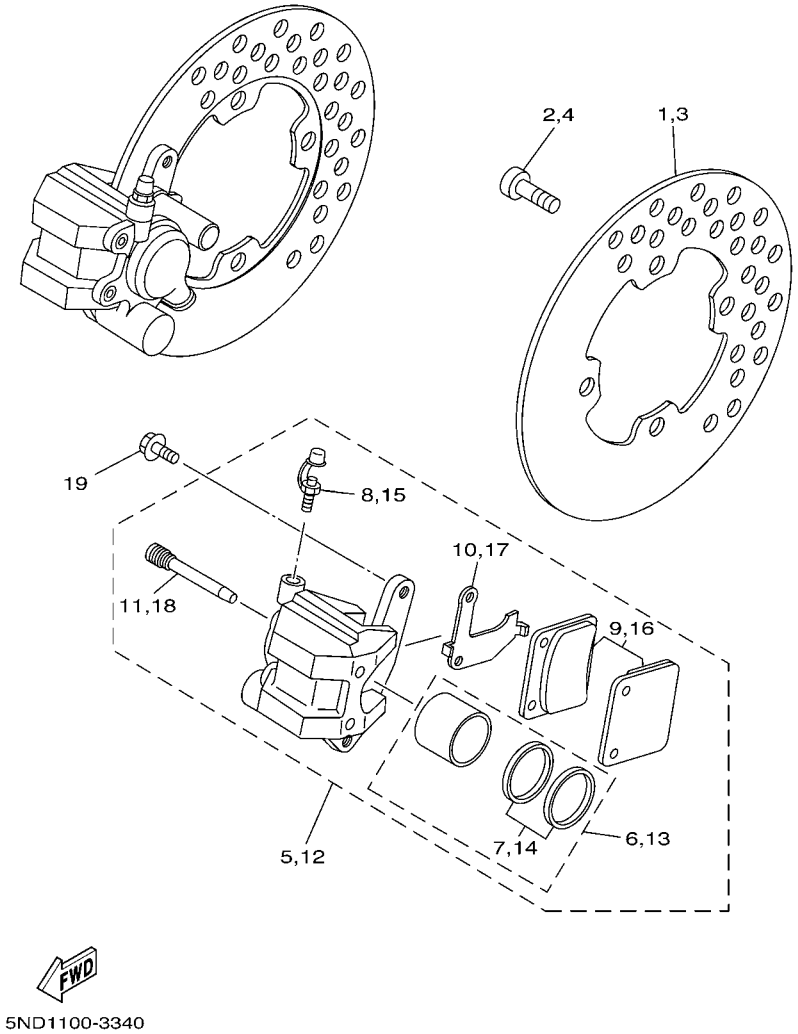

REF. NO.	PART NO.	DESCRIPTION	USA	CAN	EUR			REMARKS
1	5ND–F582T–00	DISC, BRAKE (LEFT)	1	1	1			
2	90149–08268	SCREW	4	4	4			
3	5ND–F582T–00	DISC, BRAKE (LEFT)	1	1	1			
4	90149–08268	SCREW	4	4	4			
5	3GD–2580T–00	CALIPER ASSY (LEFT)	1	1	1			
6	3GD–W0057–00	.PISTON ASSY, CALIPER	1	1	1			
7	3GD–W0047–00	..CALIPER SEAL KIT	1	1	1			
8	1UY–W0048–50	.BLEED SCREW KIT	1	1	1			
9	3GD–W0045–00	.BRAKE PAD KIT	1	1	1			
10	3GD–25827–00	.SHIM, CALIPER	1	1	1			
11	3GD–25933–00	.PIN, PAD	2	2	2			
12	3GD–2580U–00	CALIPER ASSY (RIGHT)	1	1	1			
13	3GD–W0057–00	.PISTON ASSY, CALIPER	1	1	1			
14	3GD–W0047–00	..CALIPER SEAL KIT	1	1	1			
15	1UY–W0048–50	.BLEED SCREW KIT	1	1	1			
16	3GD–W0045–00	.BRAKE PAD KIT	1	1	1			
17	3GD–25828–00	.SHIM, CALIPER	1	1	1			
18	3GD–25933–00	.PIN, PAD	2	2	2			
19	90105–08520	BOLT, FLANGE	4	4	4			

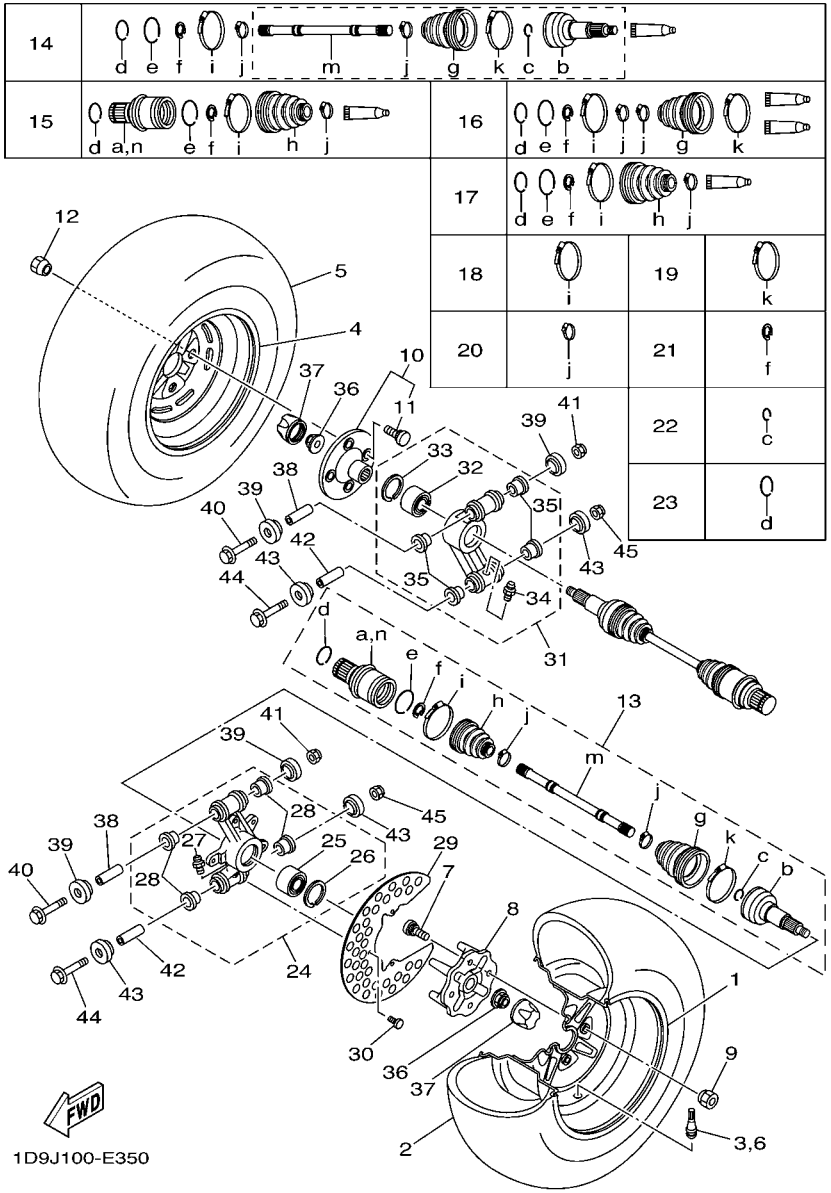

FIG. 35 REAR WHEEL

REF. NO.	PART NO.	DESCRIPTION	USA	CAN	EUR			REMARKS
1	1D9–F5390–20	REAR WHEEL COMP.	1	1	1			
2	94110–12809	TIRE (AT25X10-12 M980)	1	1	1			CHENG SHIN
3	93900–00813	VALVE, RIM (TR413)	1	1	1			
4	1D9–F5390–20	REAR WHEEL COMP.	1	1	1			
5	94110–12809	TIRE (AT25X10-12 M980)	1	1	1			CHENG SHIN
6	93900–00813	VALVE, RIM (TR413)	1	1	1			
7	90114–10010	BOLT, SERRATION	4	4	4			
8	1D9–F5311–00	HUB, REAR	1	1	1			
9	90179–10540	NUT	4	4	4			
10	1D9–F532E–00	HUB SUB-ASSY	1	1	1			
11	90114–10010	.BOLT, SERRATION	4	4	4			
12	90179–10540	NUT	4	4	4			
13	1D9–F531H–03	REAR DRIVE SHAFT ASSY	2	2	2			
14	1D9–F510F–00	.BALL JOINT SET	1	1	1			
15	1D9–F510J–01	.DOUBLE OFF SET JOINT	1	1	1			
16	5KM–2530X–11	.BOOT SET (BALL JOINT)	1	1	1			
17	5KM–2530Y–10	.BOOT SET(DOUBLE OFFSET JOINT)	1	1	1			
18	4KB–2511H–00	.BOOT BAND(DOUBLE OFFSETJOINT)	1	1	1			
19	3HN–2511G–01	.BOOT BAND (BALL JOINT)	1	1	1			
20	3HN–2512G–01	.BOOT BAND (SMALL)	1	1	1			
21	2HR–2512J–00	.SNAP RING	1	1	1			
22	4KB–2512H–00	.CIRCLIP	1	1	1			
23	5KM–2536E–10	.CLIP, SPRING	1	1	1			
24	1D9–F530F–01	REAR KNUCKLE ASSY	1	1	1			
25	93305–00602	.BEARING	1	1	1			
26	99009–55500	.CIRCLIP	1	1	1			
27	93700–06009	.NIPPLE, GREASE	2	2	2			

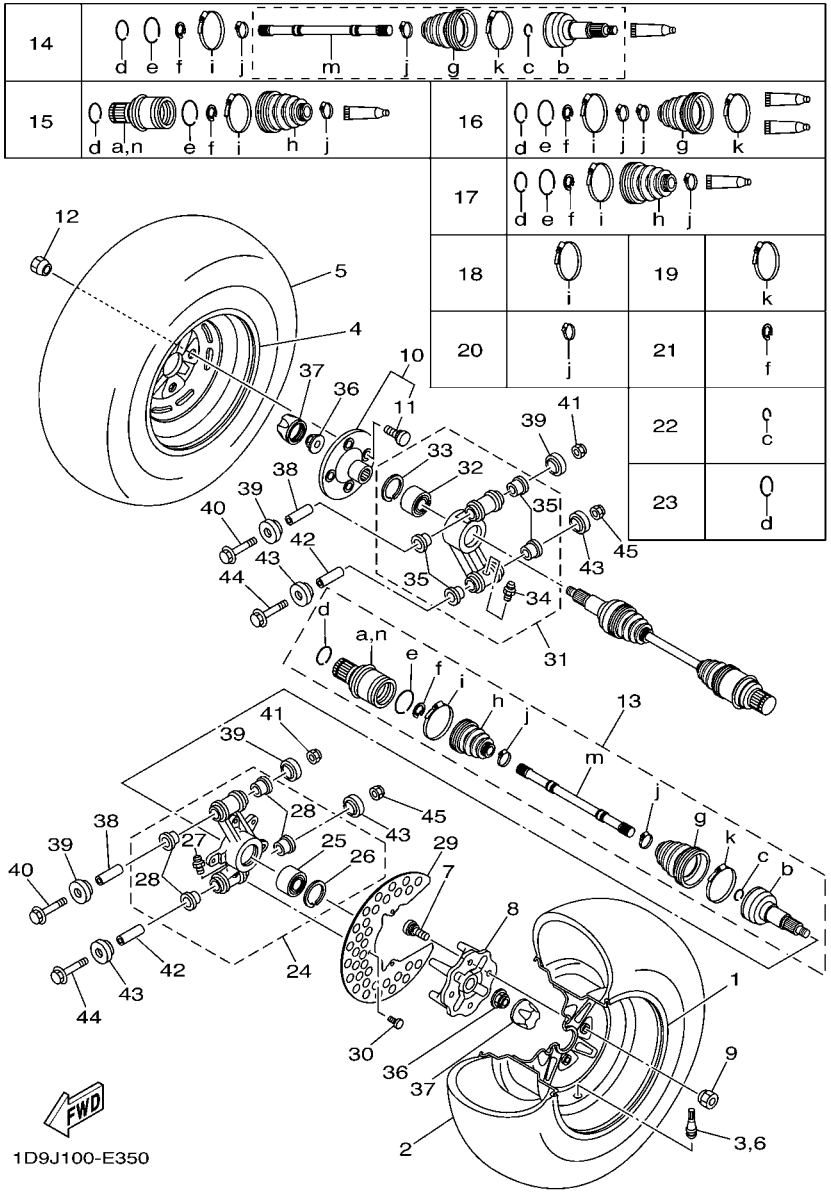

FIG. 35 REAR WHEEL

REF. NO.	PART NO.	DESCRIPTION	USA	CAN	EUR			REMARKS
28	90381–17067	.BUSH, SOLID	4	4	4			
29	1D9–F5718–00	PROTECTOR, DISK BRAKE	1	1	1			
30	90149–06280	SCREW	3	3	3			
31	1D9–F532F–01	REAR KNUCKLE ASSY.,2	1	1	1			
32	93305–00602	.BEARING	1	1	1			
33	99009–55500	.CIRCLIP	1	1	1			
34	93700–06009	.NIPPLE, GREASE	2	2	2			
35	90381–17067	.BUSH, SOLID	4	4	4			
36	90179–20006	NUT	2	2	2			
37	5GT–2512A–00	CAP, WHEEL	2	2	2			
38	5KM–23448–00	SPACER	2	2	2			
39	2NL–23517–00	COVER, THRUST 1	4	4	4			
40	90105–10480	BOLT, FLANGE	2	2	2			
41	90185–10844	NUT, SELF-LOCKING	2	2	2			
42	5KM–23448–00	SPACER	2	2	2			
43	2NL–23517–00	COVER, THRUST 1	4	4	4			
44	90105–10480	BOLT, FLANGE	2	2	2			
45	90185–10844	NUT, SELF-LOCKING	2	2	2			

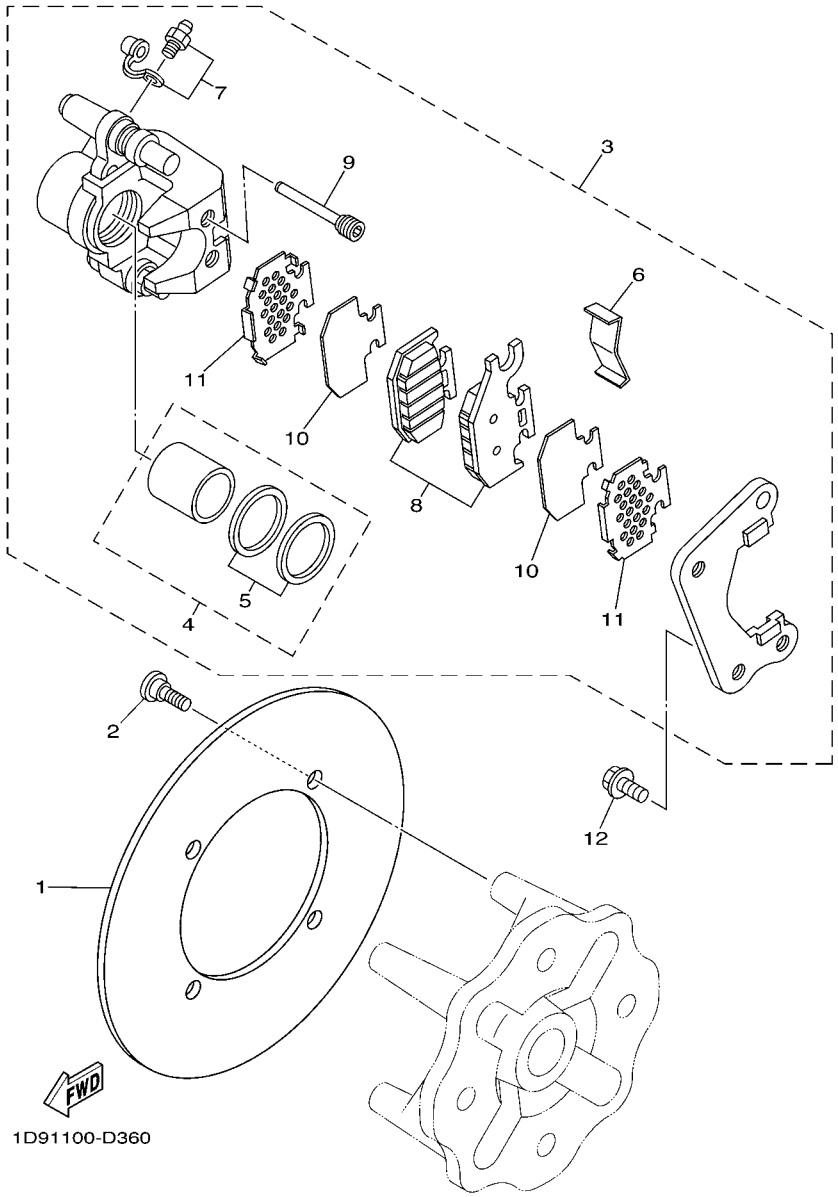

FIG. 36 REAR BRAKE CALIPER

REF. NO.	PART NO.	DESCRIPTION	USA	CAN	EUR			REMARKS
1	1D9–F5831–00	DISC, BRAKE (RIGHT)	1	1	1			
2	90149–08268	SCREW	4	4	4			
3	1D9–2580V–01	CALIPER ASSY, REAR 1	1	1	1			
4	3TB–W0057–00	.PISTON ASSY, CALIPER	1	1	1			
5	3GD–W0047–00	..CALIPER SEAL KIT	1	1	1			
6	4GY–25919–50	.SUPPORT, PAD	1	1	1			
7	1UY–W0048–50	.BLEED SCREW KIT	1	1	1			
8	1D9–W0046–00	.BRAKE PAD KIT 2	1	1	1			
9	5GH–25924–00	.PIN, PAD	2	2	2			
10	5UG–25827–00	.SHIM, CALIPER	2	2	2			
11	5GH–25828–00	.SHIM, CALIPER	2	2	2			
12	90105–088B2	BOLT, FLANGE	2	2	2			

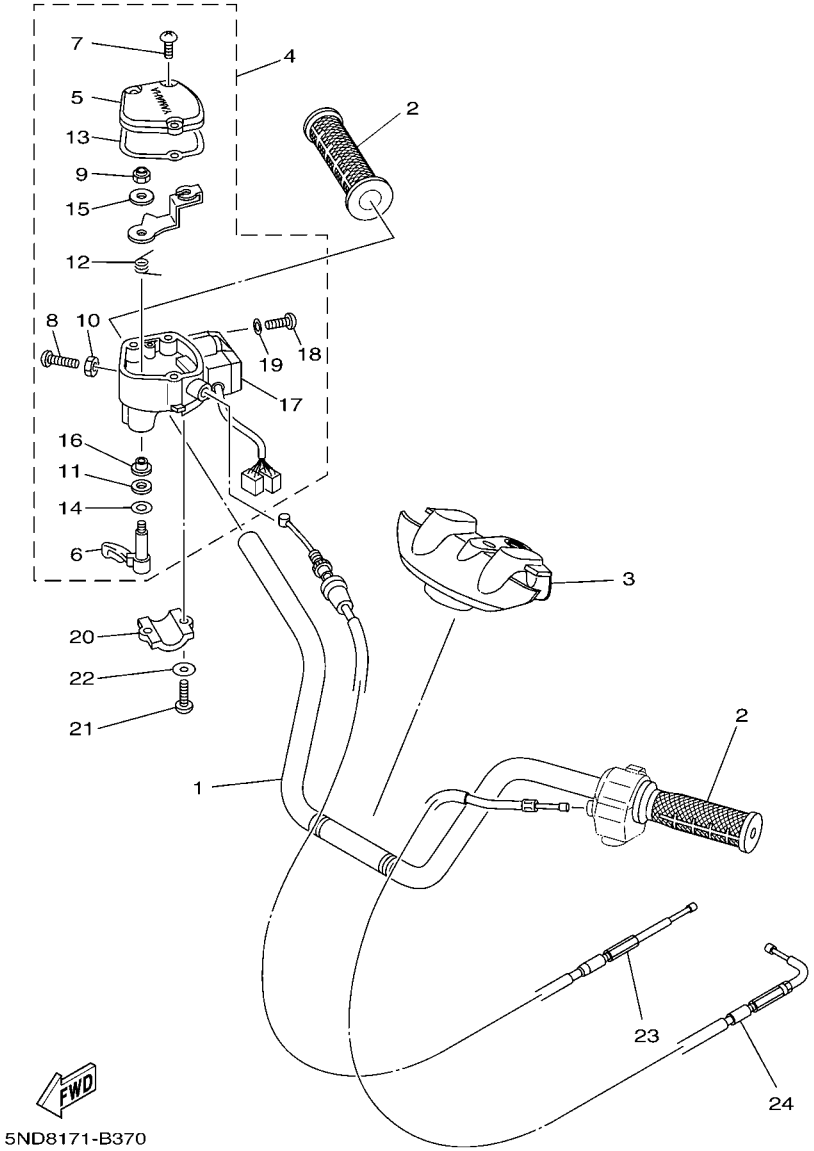

FIG. 37 STEERING HANDLE & CABLE

REF. NO.	PART NO.	DESCRIPTION	USA	CAN	EUR			REMARKS
1	5FU–F6111–10	HANDLEBAR	1	1	1			
2	5FU–F6241–10	GRIP	2	2	2			
3	5ND–F6124–00	PROTECTOR, HANDLEBAR	1	1	1			
4	5KM–26250–00	THROTTLE LEVER ASSY	1	1	1			
5	4KB–2628F–10	.CAP, GEAR	1	1	1			
6	1NV–2625G–01	.LEVER, THROTTLE	1	1	1			
7	90149–04278	.SCREW	3	3	3			
8	98507–05020	.SCREW, PAN HEAD	1	1	1			
9	95607–05100	.NUT, U	1	1	1			
10	95307–05700	.NUT	1	1	1			
11	93104–09025	.OIL SEAL	1	1	1			
12	1NV–26304–00	.SPRING	1	1	1			
13	4KB–2628G–00	.GASKET	1	1	1			
14	1NV–26129–00	.WASHER	1	1	1			
15	1NV–26398–00	.WASHER	1	1	1			
16	1NV–2625K–00	.COLLAR	1	1	1			
17	5KM–83976–00	.SWITCH, HANDLE 1	1	1	1			
18	98507–04016	.SCREW, PAN HEAD	2	2	2			
19	92907–04600	.WASHER	2	2	2			
20	4V4–82913–00	HOLDER, LEVER LOWER 1	1	1	1			
21	98507–05020	SCREW, PAN HEAD	2	2	2			
22	92907–05600	WASHER, PLATE	2	2	2			
23	5GH–26311–01	CABLE, THROTTLE 1	1	1	1			
24	5VH–F6331–00	CABLE, STARTER 1	1	1	1			

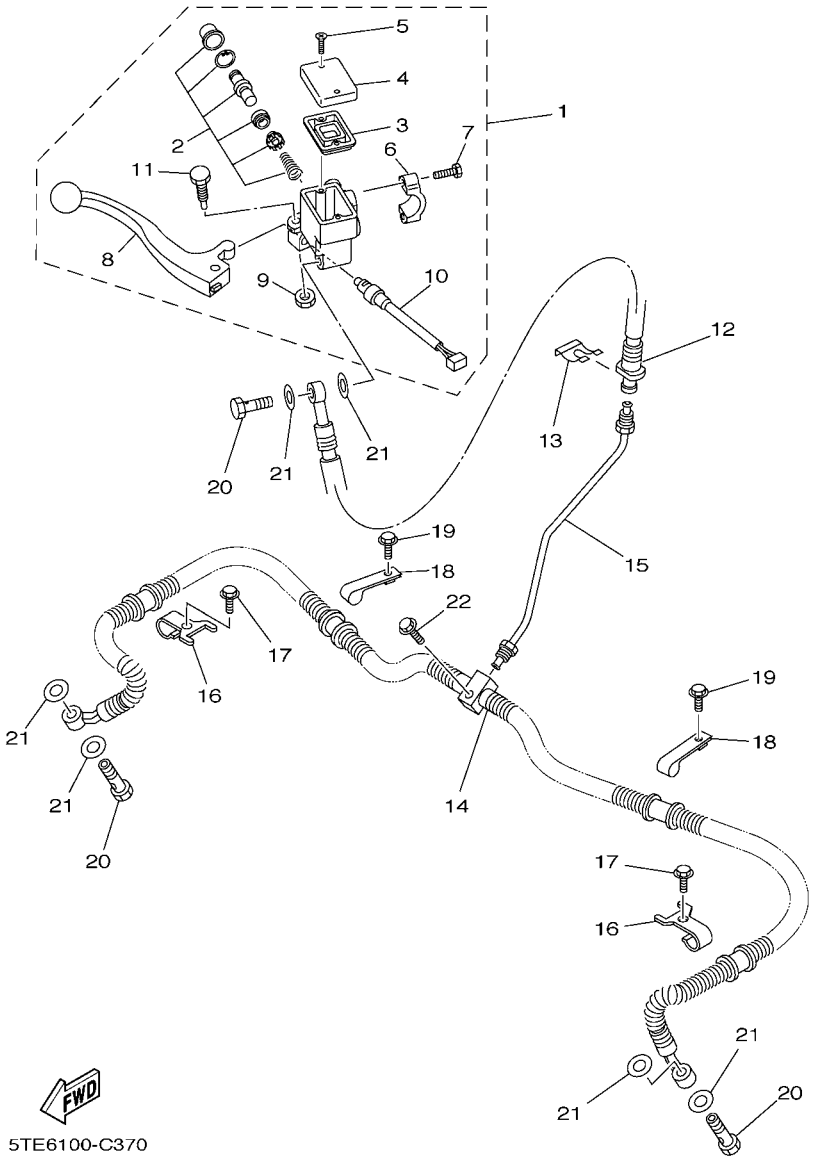

FIG. 38 FRONT MASTER CYLINDER

REF. NO.	PART NO.	DESCRIPTION	USA	CAN	EUR			REMARKS
1	5KM–2583T–01	MASTER CYLINDER ASSY	1	1	1			
2	8CR–W0041–00	.CYLINDER KIT, MASTER	1	1	1			
3	4L0–25854–00	.DIAPHRAGM, RESERVOIR	1	1	1			
4	5JX–25852–01	.CAP, RESERVOIR	1	1	1			
5	98706–04012	.SCREW, FLAT HEAD	2	2	2			
6	5GH–25867–00	.BRACKET, MASTER CYLINDER	1	1	1			
7	5EB–26332–00	.BOLT	2	2	2			
8	5KM–83922–00	.LEVER 2	1	1	1			
9	95606–06100	.NUT, U	1	1	1			
10	5LP–83980–00	.FRONT STOP SWITCH ASSY	1	1	1			
11	1FK–2589F–00	.BOLT, LEVER	1	1	1			
12	5ND–F5872–00	HOSE, BRAKE 1	1	1	1			
13	2GU–25866–00	CIRCLIP	1	1	1			
14	1D9–F5873–00	HOSE, BRAKE 2	1	1	1			
15	5ND–F5871–00	PIPE, BRAKE	1	1	1			
16	1D9–F5875–00	HOLDER, BRAKE HOSE 1	2	2	2			
17	9582P–06012	BOLT, FLANGE	2	2	2			
18	5ND–F3192–00	BAND	2	2	2			
19	9582P–06012	BOLT, FLANGE	2	2	2			
20	90401–10159	BOLT, UNION	3	3	3			
21	90201–10118	WASHER, PLATE	6	6	6			
22	95807–06025	BOLT, FLANGE	1	1	1			

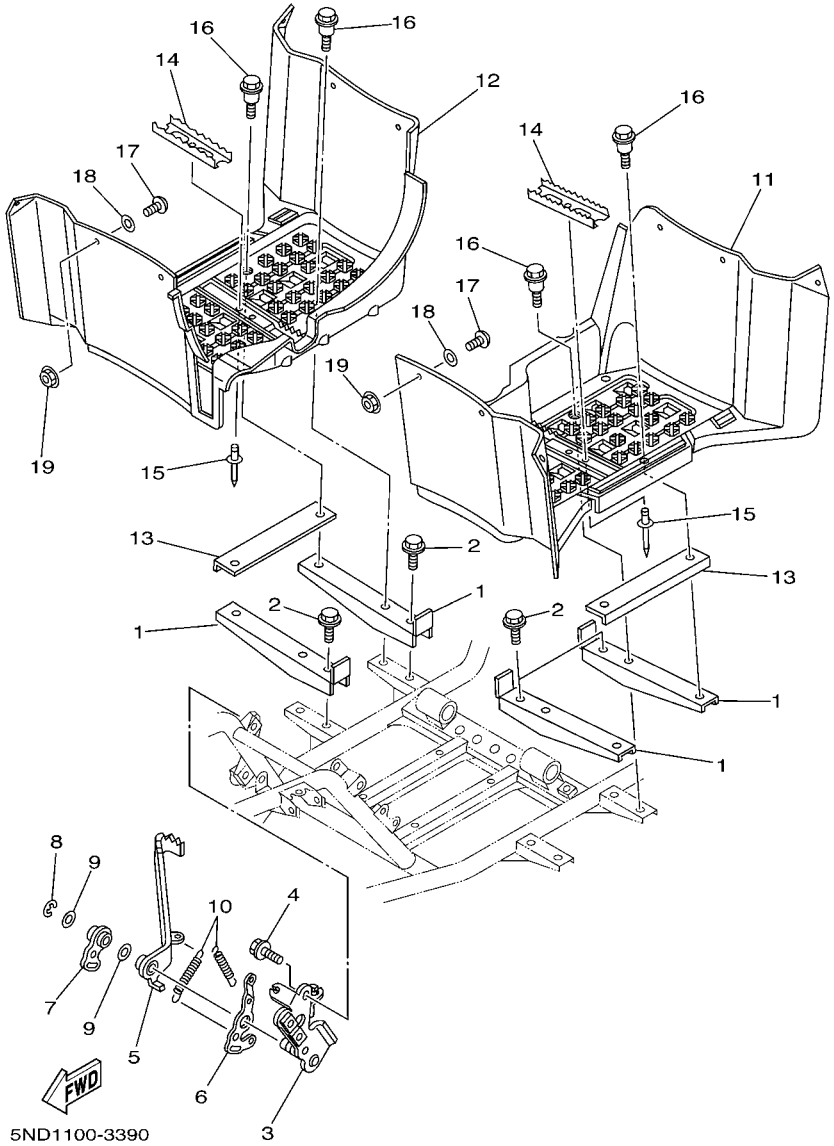

FIG. 39 STAND & FOOTREST

REF. NO.	PART NO.	DESCRIPTION	USA	CAN	EUR			REMARKS
1	5ND–F7471–01	BAR, FOOTREST 1	4	4	4			
2	9581P–08012	BOLT, FLANGE	4	4	4			
3	5ND–F7412–10	BRACKET, FOOTREST 1	1	1	1			
4	9581P–08012	BOLT, FLANGE	2	2	2			
5	5ND–F7211–00	PEDAL, BRAKE	1	1	1			
6	5ND–F7254–10	HOOK	1	1	1			
7	5ND–F7252–10	LEVER, BRAKE PEDAL	1	1	1			
8	93430–10015	CIRCLIP	1	1	1			
9	90201–144J2	WASHER, PLATE	2	2	2			
10	90506–12441	SPRING, TENSION	2	2	2			
11	5ND–F7453–01	COVER 1	1	1	1			
12	5ND–F7463–01	COVER 2	1	1	1			
13	5ND–F7445–00	PLATE 1	2	2	2			
14	5UH–F741A–00	ARM 1	2	2	2			
15	90267–489U9	RIVET, BLIND	2	2	2			
16	90109–06072	BOLT	8	8	8			
17	90149–05299	SCREW	12	12	12			
18	90201–05029	WASHER, PLATE	12	12	12			
19	95707–05300	NUT, FLANGE	12	12	12			

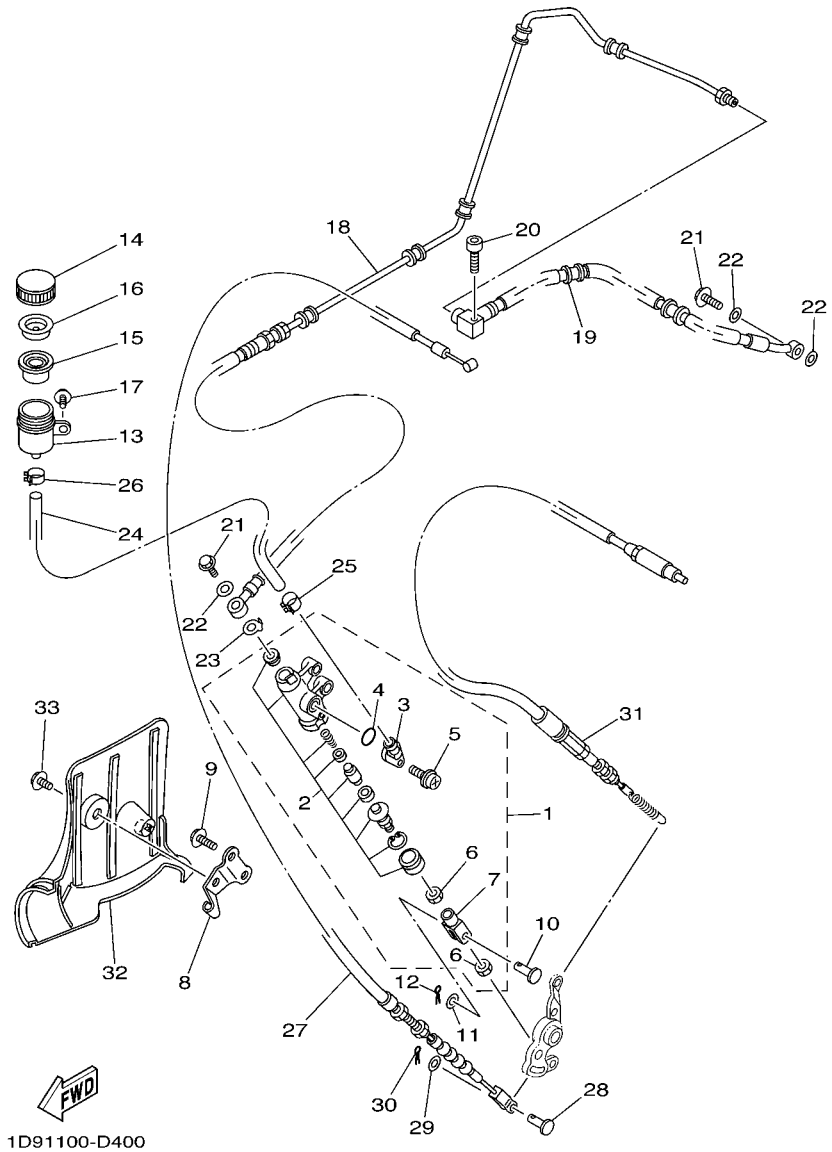

FIG. 40 REAR MASTER CYLINDER

REF. NO.	PART NO.	DESCRIPTION	USA	CAN	EUR			REMARKS
1	5KM–2583V–00	RR. MASTER CYLINDER ASSY.	1	1	1			
2	5KM–W0042–50	.CYLINDER KIT, MASTER	1	1	1			
3	31A–2582A–50	.JOINT	1	1	1			
4	93210–15620	.O-RING	1	1	1			
5	3GM–2589H–00	.SCREW	1	1	1			
6	4SS–27218–00	.NUT	2	2	2			
7	2YK–27222–00	.JOINT	1	1	1			
8	5ND–F637G–00	HOLDER, WIRE	1	1	1			
9	95817–08025	BOLT, FLANGE	2	2	2			
10	90240–08013	PIN, CLEVIS	1	1	1			
11	90201–08083	WASHER, PLATE	1	1	1			
12	91401–16012	PIN, COTTER	1	1	1			
13	2VN–25894–00	TANK, RESERVOIR	1	1	1			
14	4PX–25852–00	CAP, RESERVOIR	1	1	1			
15	2VN–25854–00	DIAPHRAGM, RESERVOIR	1	1	1			
16	2VN–25855–00	BUSH,DIAPHRAGM	1	1	1			
17	90105–06690	BOLT, FLANGE	1	1	1			
18	1D9–F584B–00	HOSE, BRAKE	1	1	1			
19	1D9–F581J–00	HOSE, BRAKE 4	1	1	1			
20	97017–06025	BOLT	1	1	1			
21	90401–10159	BOLT, UNION	2	2	2			
22	90201–10118	WASHER, PLATE	3	3	3			
23	5GH–25844–00	WASHER, LOCK	1	1	1			
24	5ND–F5895–00	HOSE, RESERVOIR	1	1	1			
25	90467–14057	CLIP	1	1	1			
26	90467–11044	CLIP	1	1	1			
27	5GH–26341–01	WIRE, BRAKE 1	1	1	1			

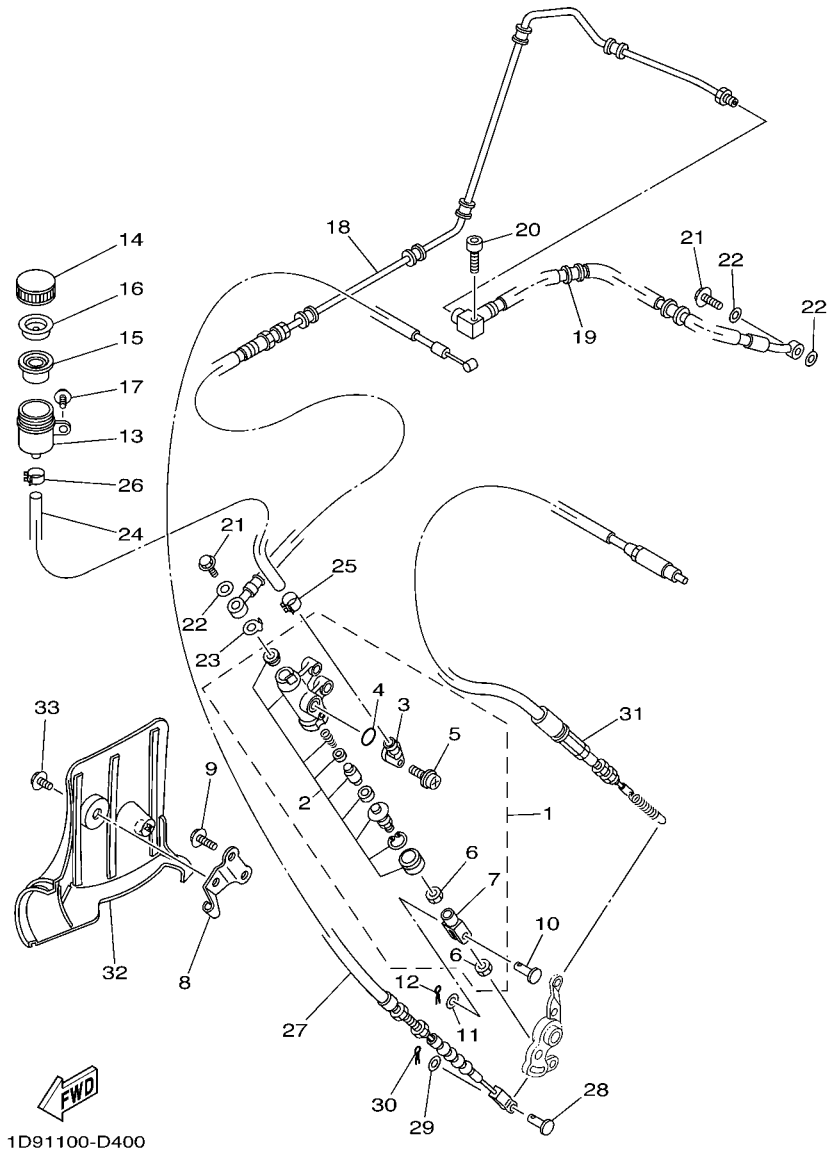

FIG. 40 REAR MASTER CYLINDER

REF. NO.	PART NO.	DESCRIPTION	USA	CAN	EUR			REMARKS
28	90240–06076	PIN, CLEVIS	1	1	1			
29	90201–06042	WASHER, PLATE	1	1	1			
30	91401–20012	PIN, COTTER	1	1	1			
31	5GH–2637F–00	CABLE, CONTROL 2	1	1	1			
32	5ND–F7491–00	PROTECTOR	1	1	1			
33	9582P–06012	BOLT, FLANGE	1	1	1			

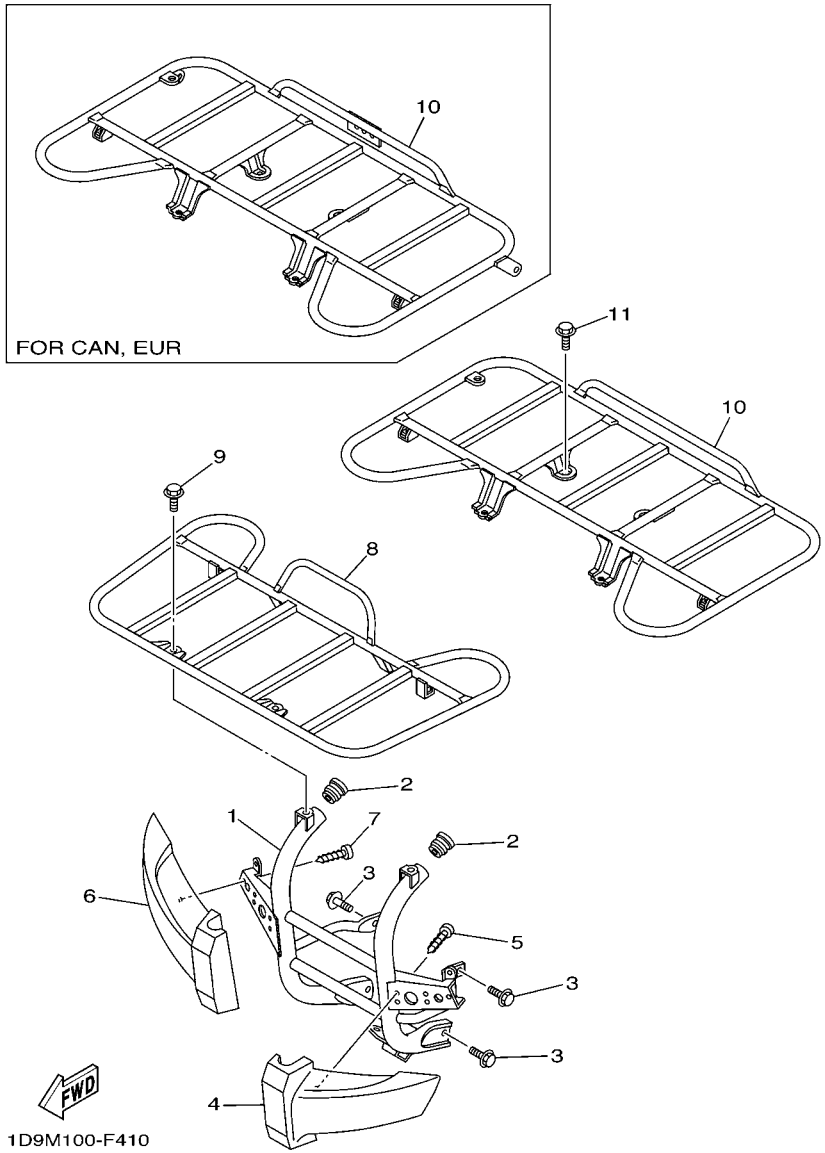

FIG. 41 GUARD

REF. NO.	PART NO.	DESCRIPTION	USA	CAN	EUR			REMARKS
1	1D9–F845N–01	BAR, CARRY FRONT	1	1	1			
2	5KM–2482H–01	CAP	2	2	2			
3	9581P–08012	BOLT, FLANGE	4	4	4			
4	1D9–F8415–00	DAMPER 1	1	1	1			
5	97707–60016	SCREW, TAPPING	5	5	5			
6	1D9–F8416–00	DAMPER 2	1	1	1			
7	97707–60016	SCREW, TAPPING	5	5	5			
8	5ND–F4841–01	CARRIER, FRONT	1	1	1			
9	9581P–08012	BOLT, FLANGE	4	4	4			
10	5ND–F4842–00	CARRIER, REAR	1					
	5ND–F4842–10	CARRIER, REAR		1	1			
11	9581P–08012	BOLT, FLANGE	4	4	4			

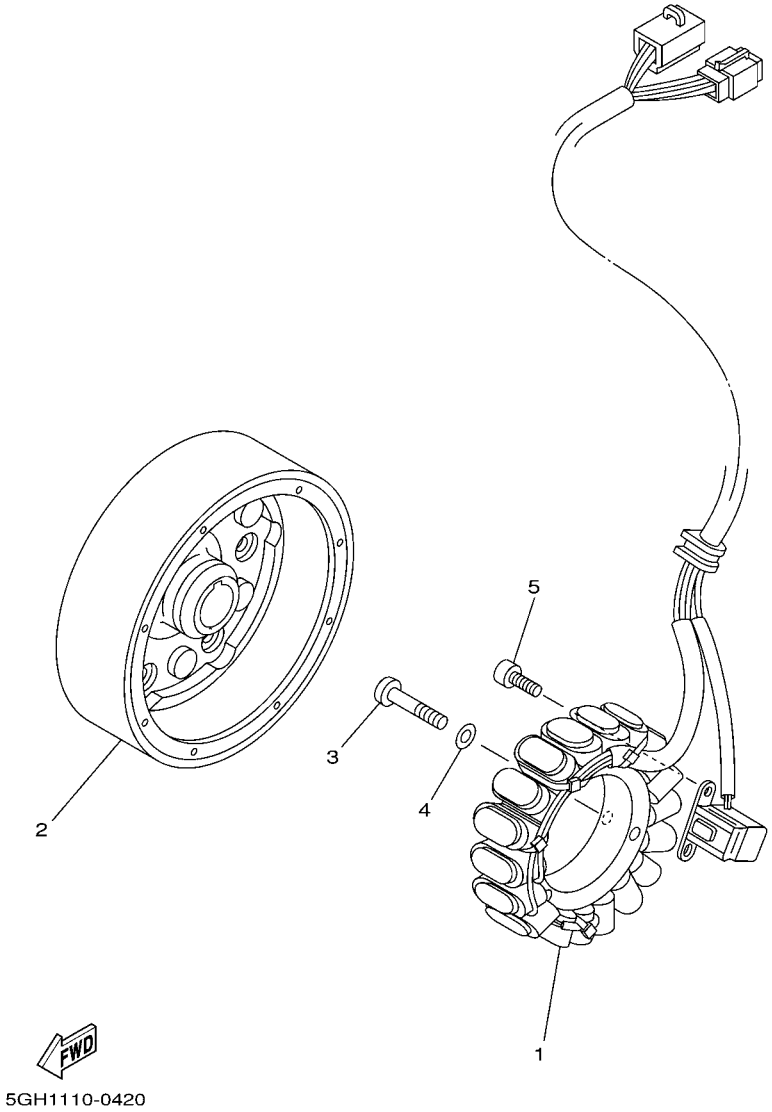

FIG. 42 GENERATOR

REF. NO.	PART NO.	DESCRIPTION	USA	CAN	EUR			REMARKS
1	5ND–81410–00	STATOR ASSY	1	1	1			
2	5GH–81450–01	ROTOR ASSY	1	1	1			
3	98507–06030	SCREW, PAN HEAD	3	3	3			
4	92907–06600	WASHER, PLATE	3	3	3			
5	91317–05012	BOLT	2	2	2			

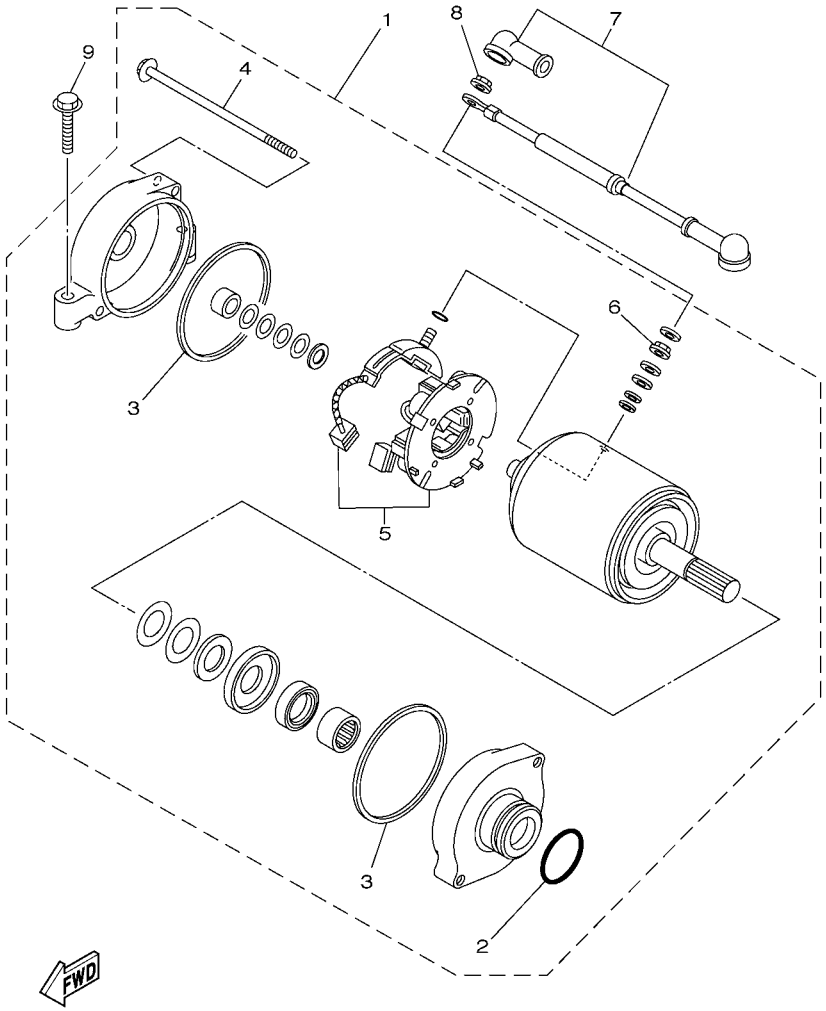

5ND6100-C440

FIG. 43 STARTING MOTOR

REF. NO.	PART NO.	DESCRIPTION	USA	CAN	EUR			REMARKS
1	5KM–81890–00	MOTOR ASSY	1	1	1			
2	1FK–81847–00	.O-RING	1	1	1			
3	11H–81844–00	.GASKET	2	2	2			
4	3AJ–81826–00	.BOLT	2	2	2			
5	3AJ–81801–00	.BRUSH SET	1	1	1			
6	4XV–8182A–00	.NUT	1	1	1			
7	5ND–81815–01	CORD, STARTER MOTOR	1	1	1			
8	4XV–8182A–00	NUT	1	1	1			
9	95027–06030	BOLT, FLANGE	2	2	2			

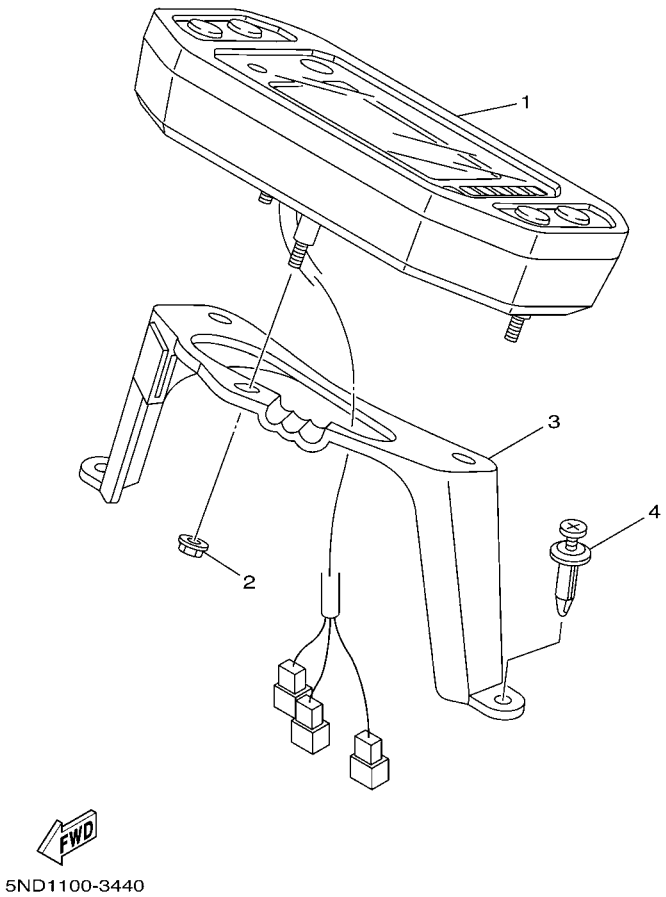

FIG. 44 METER

REF. NO.	PART NO.	DESCRIPTION	USA	CAN	EUR			REMARKS
1	5ND–83500–20	METER ASSY	1					MILE/H
	5ND–83500–30	METER ASSY		1	1			KM/H
2	95707–05500	NUT, FLANGE	3	3	3			
3	5ND–H3519–00	BRACKET, METER	1	1	1			
4	90269–06800	RIVET	2	2	2			

FIG. 45 HEADLIGHT

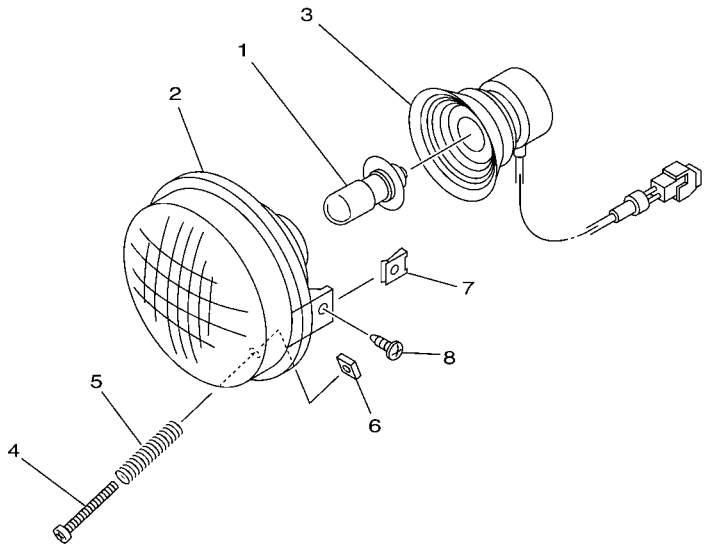

1P01100-D400

REF. NO.	PART NO.	DESCRIPTION	USA	CAN	EUR			REMARKS
1	4KB–84314–01	BULB (12V-30/30W)	2	2	2			
2	5KM–84320–01	LENS ASSY	2	2	2			
3	5EH–84340–00	SOCKET CORD ASSY 1	2	2	2			
4	98507–03540	SCREW, PAN HEAD	2	2	2			
5	2GU–84332–00	SPRING, SCREW	2	2	2			
6	2GU–84334–00	NUT, ADJUSTING	2	2	2			
7	90183–05008	NUT, SPRING	4	4	4			
8	90150–05802	SCREW, ROUND HEAD	4	4	4			

FIG. 46 TAILLIGHT

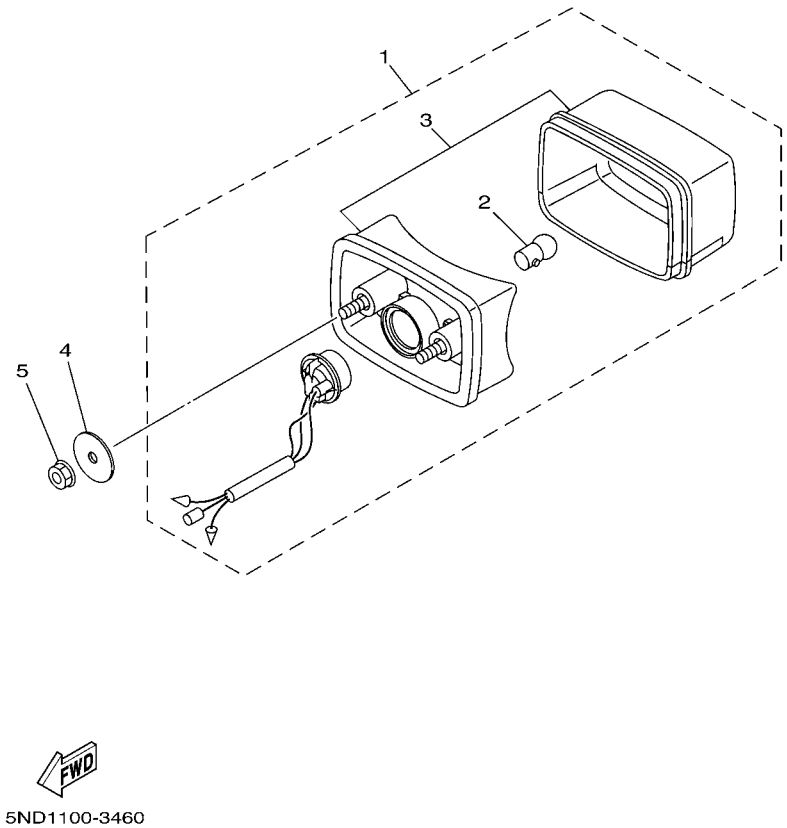

REF. NO.	PART NO.	DESCRIPTION	USA	CAN	EUR			REMARKS
1	5KM–84710–00	TAILLIGHT UNIT ASSY	1		1			
2	1A2–84714–41	.BULB (12V-21/5W)	1		1			
3	5KM–8472C–10	.LENS, CP.	1		1			
4	90201–06074	WASHER, PLATE	2		2			
5	95707–06300	NUT, NYLON	2		2			

FIG. 47 TAILLIGHT 2

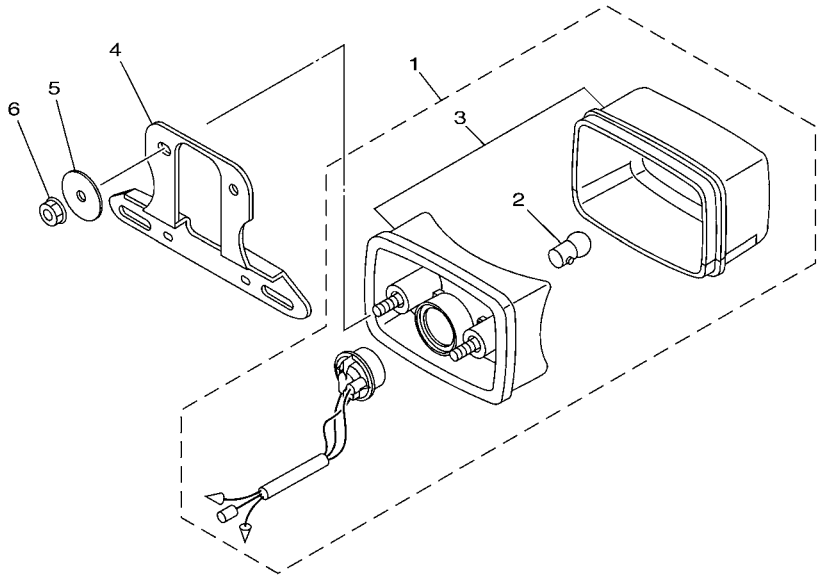

5ND1100-3470

REF. NO.	PART NO.	DESCRIPTION	USA	CAN	EUR			REMARKS
1	5KM–84710–00	TAILLIGHT UNIT ASSY		1				
2	1A2–84714–41	.BULB (12V-21/5W)		1				
3	5KM–8472C–10	.LENS, CP.		1				
4	5GH–84751–10	BRACKET, LICENSE		1				
5	90201–06074	WASHER, PLATE		2				
6	95707–06300	NUT, NYLON		2				

FIG. 48 HANDLE SWITCH & LEVER

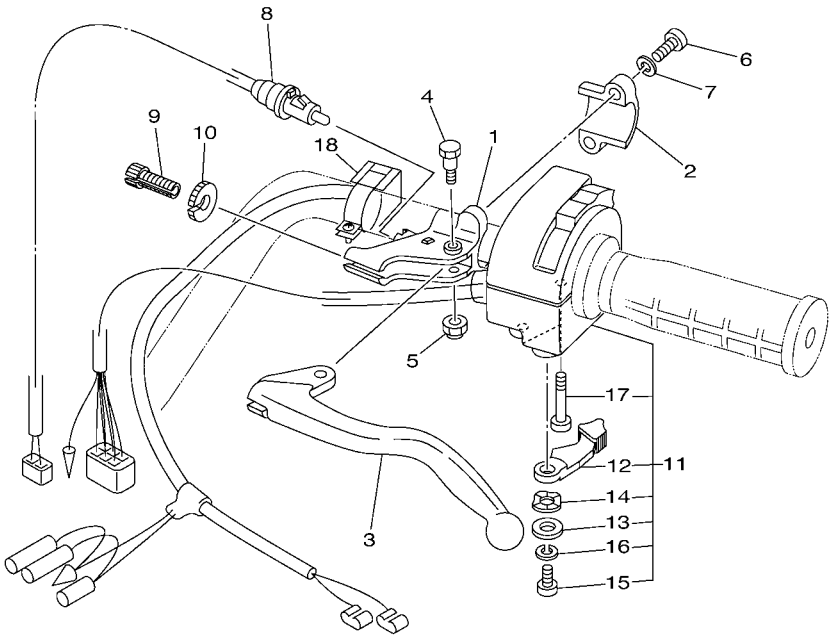

1D9V100-F480

REF. NO.	PART NO.	DESCRIPTION	USA	CAN	EUR			REMARKS
1	1YW–82911–02	HOLDER, LEVER 1	1	1	1			
2	2XJ–82913–00	HOLDER, LEVER LOWER 1	1	1	1			
3	2HT–83912–00	LEVER 1	1	1	1			
4	90109–06799	BOLT	1	1	1			
5	95607–06100	NUT, U	1	1	1			
6	98507–06020	SCREW, PAN HEAD	2	2	2			
7	92907–06100	WASHER, SPRING	2	2	2			
8	5KM–82917–00	SWITCH	1	1	1			
9	90123–08046	BOLT	1	1	1			
10	90179–08148	NUT	1	1	1			
11	5KM–83972–00	SWITCH, HANDLE 4	1	1	1			
12	5KM–83941–00	.LEVER, STARTER	1	1	1			
13	1UY–83909–00	.WASHER, SPECIAL	1	1	1			
14	3L4–83943–00	.WASHER, STARTER	1	1	1			
15	98517–05012	.SCREW, PAN HEAD	1	1	1			
16	92907–05100	.WASHER, SPRING	1	1	1			
17	98507–05030	.SCREW, PAN HEAD	2	2	2			
18	1C5–83976–00	SWITCH, HANDLE 1			1			

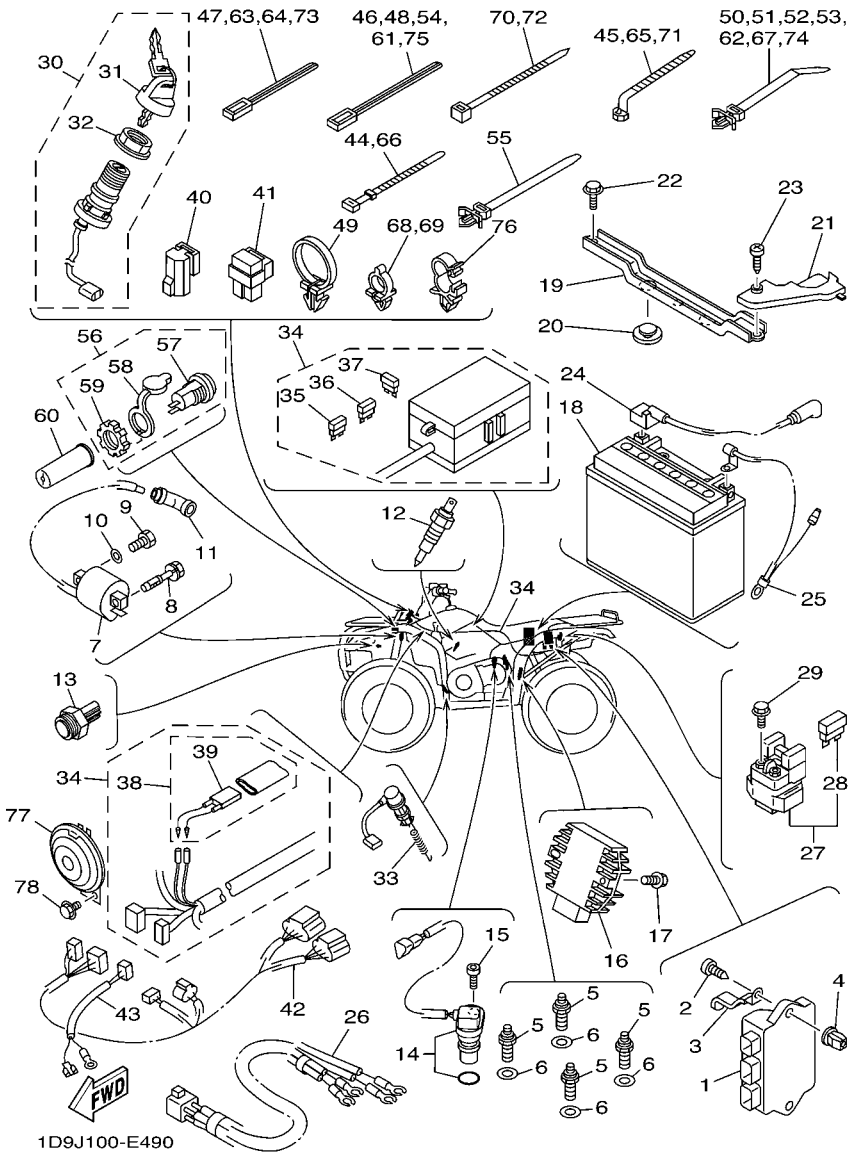

FIG. 49 ELECTRICAL 1

REF. NO.	PART NO.	DESCRIPTION	USA	CAN	EUR			REMARKS
1	5ND–85540–10	C.D.I. UNIT ASSY	1	1	1			
2	97707–60420	SCREW, TAPPING	1	1	1			
3	90462–06016	CLAMP	1	1	1			
4	90338–08226	PLUG	1	1	1			
5	3GB–82540–01	NEUTRAL SWITCH ASSY	4	4	4			
6	90430–10148	GASKET	4	4	4			
7	3KJ–82310–10	IGNITION COIL ASSY	1	1	1			
8	90109–06723	BOLT	1	1	1			
9	97007–06020	BOLT	1	1	1			
10	92907–06600	WASHER, PLATE	1	1	1			
11	1UY–82370–20	PLUG CAP ASSY	1	1	1			
12	5KM–82560–00	THERMO SWITCH ASSY	1	1	1			
13	5ND–82560–10	THERMO SWITCH ASSY	1	1	1			
14	5ND–83755–01	SENSOR, SPEED	1	1	1			
15	90110–06001	BOLT, HEXAGON SOCKET HEAD	1	1	1			
16	5GT–81960–00	RECTIFIER & REGULATOR ASSY	1	1	1			
17	95807–06020	BOLT, FLANGE	2	2	2			
18	5FU–H2100–20	BATTERY ASSY (YUASA YTX20L-BS)	1	1	1			
19	5ND–H2128–00	BRACKET, BATTERY	1	1	1			
20	371–82121–00	PAD, BATTERY	2	2	2			
21	5ND–H2119–00	COVER, LEAD WIRE	1	1	1			
22	95807–06020	BOLT, FLANGE	2	2	2			
23	97707–60016	SCREW, TAPPING	1	1	1			
24	5ND–H2115–00	WIRE, PLUS LEAD	1	1	1			
25	5ND–H2116–00	WIRE, MINUS LEAD	1	1	1			
26	5ND–82541–00	WIRE, LEAD	1	1	1			
27	4SV–81940–12	STARTER RELAY ASSY	1	1	1			

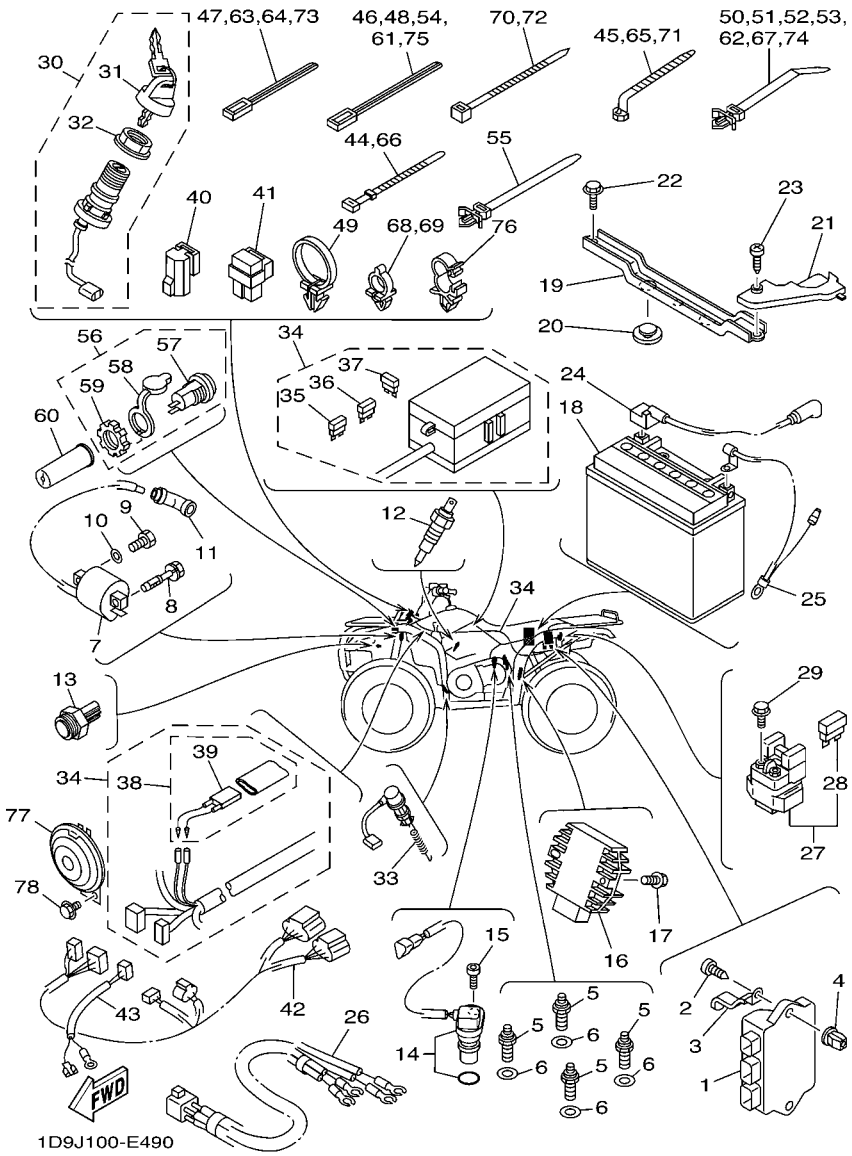

FIG. 49 ELECTRICAL 1

REF. NO.	PART NO.	DESCRIPTION	USA	CAN	EUR			REMARKS
28	1AE–82151–00	.FUSE (30A-BL)	2	2	2			
29	9502P–06008	BOLT, FLANGE	2	2	2			
30	5ND–82510–00	MAIN SWITCH ASSY	1	1	1			
31	3HN–82579–00	.CAP, KEY	1	1	1			
32	3HN–82569–00	.NUT, MAIN SWITCH	1	1	1			
33	4KB–82530–10	STOP SWITCH ASSY	1	1	1			
34	1D9–82590–00	WIRE HARNESS ASSY	1	1				
	1D9–82590–10	WIRE HARNESS ASSY			1			
35	5JJ–82151–10	.FUSE (15A-BL)	2	2	2			
36	5JJ–82151–30	.FUSE (10A-BL)	5	5	5			
37	5JJ–82151–50	.FUSE (3A-BL)	2	2	2			
38	5ND–82180–00	.CIRCUIT BREAKER ASSY	1	1	1			
39	5ND–82560–00	..THERMO SWITCH ASSY	1	1	1			
40	29U–81950–93	RELAY ASSY	1	1	1			
41	5DM–81950–00	RELAY ASSY (G8HN-1C4T-DJ-Y52)	2	2	2			
42	5ND–82309–00	WIRE, SUB LEAD	1	1	1			
43	5KM–82509–10	WIRE, SUB LEAD	1	1	1			
44	90464–51800	CLAMP	1	1	1			
45	90464–12830	CLAMP	1	1	1			
46	90464–40825	CLAMP	1	1	1			
47	90464–31827	CLAMP	4	4	4			
48	90464–40825	CLAMP	4	4	4			
49	90464–19815	CLAMP	1	1	1			
50	90464–25800	CLAMP	1	1	1			
51	90464–25800	CLAMP	1	1	1			
52	90464–25800	CLAMP	1	1	1			
53	90464–25800	CLAMP	2	2	2			

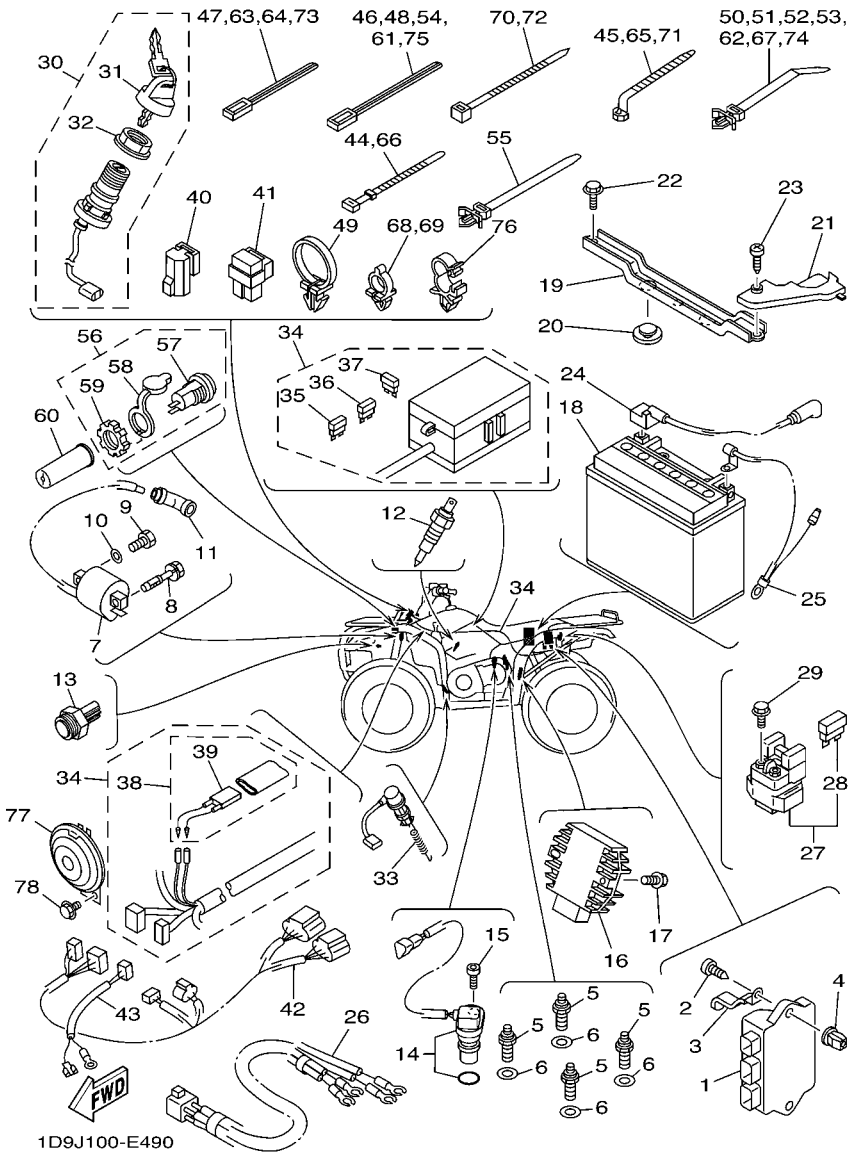

FIG. 49 ELECTRICAL 1

REF. NO.	PART NO.	DESCRIPTION	USA	CAN	EUR			REMARKS
54	90464–40825	CLAMP	1	1	1			
55	90464–38800	CLAMP	2	2	2			
56	5FU–H1920–10	TERMINAL ASSY	1	1	1			
57	5FU–H1925–10	.TERMINAL	1	1	1			
58	5FU–H1942–10	.COVER	1	1	1			
59	5FU–H191B–10	.NUT	1	1	1			
60	5FU–H2599–01	COVER, CONNECTER	1	1	1			
61	90464–40825	CLAMP	1	1	1			
62	90464–25800	CLAMP	1	1	1			
63	90464–31827	CLAMP	1	1	1			
64	90464–31827	CLAMP	2	2	2			
65	90464–12830	CLAMP	1	1	1			
66	90464–51800	CLAMP	1	1	1			
67	90464–25800	CLAMP	1	1	1			
68	90464–10833	CLAMP	1	1	1			
69	90464–10833	CLAMP	2	2	2			
70	90464–48800	CLAMP	3	3	3			
71	90464–12830	CLAMP	1	1	1			
72	90464–48800	CLAMP	1	1	1			
73	90464–31827	CLAMP	1	1	1			
74	90464–25800	CLAMP	2	2	2			
75	90464–40825	CLAMP	2	2	2			
76	90464–16006	CLAMP	1	1	1			
77	4WV–83371–00	HORN			1			
78	95817–06012	BOLT, FLANGE			1			

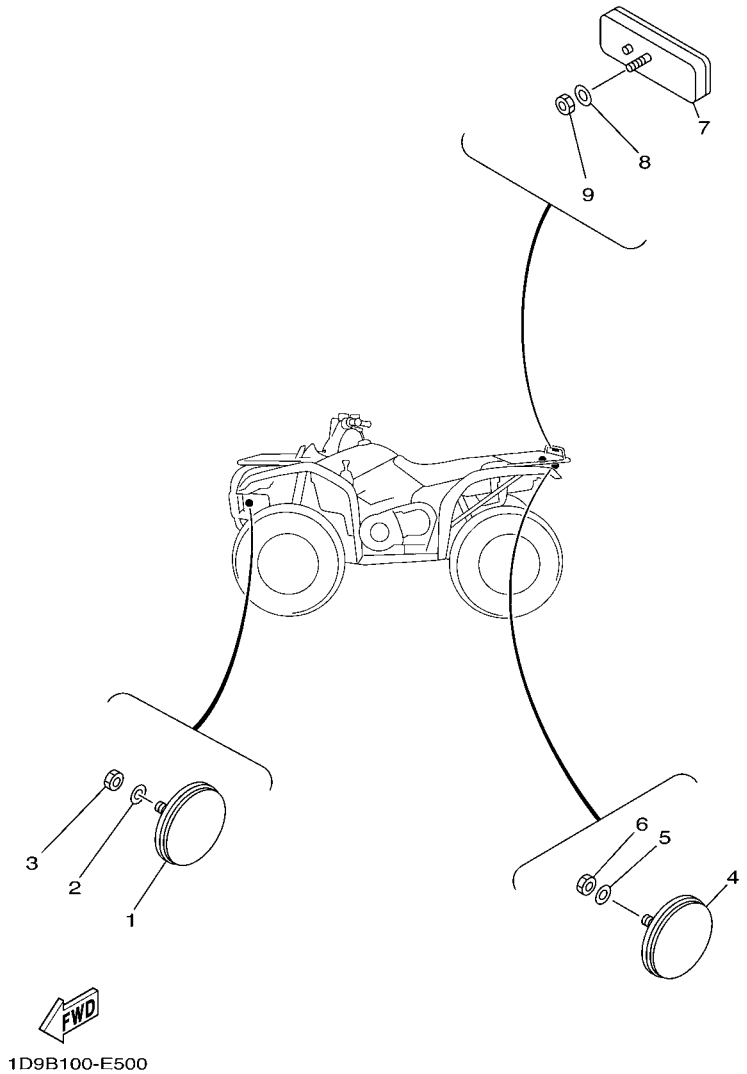

FIG. 50 ELECTRICAL 2

REF. NO.	PART NO.	DESCRIPTION	USA	CAN	EUR			REMARKS
1	2EK–85111–00	REFLECTOR, FRONT 1		2				
2	92907–05200	WASHER		2				
3	95307–05600	NUT		2				
4	449–85131–02	REFLECTOR, REAR 1		2				
5	92907–05200	WASHER		2				
6	95307–05600	NUT		2				
7	3Y6–85130–02	REAR REFLECTOR ASSY		1	1			
8	92907–05200	WASHER		1	1			
9	95307–05600	NUT		1	1			

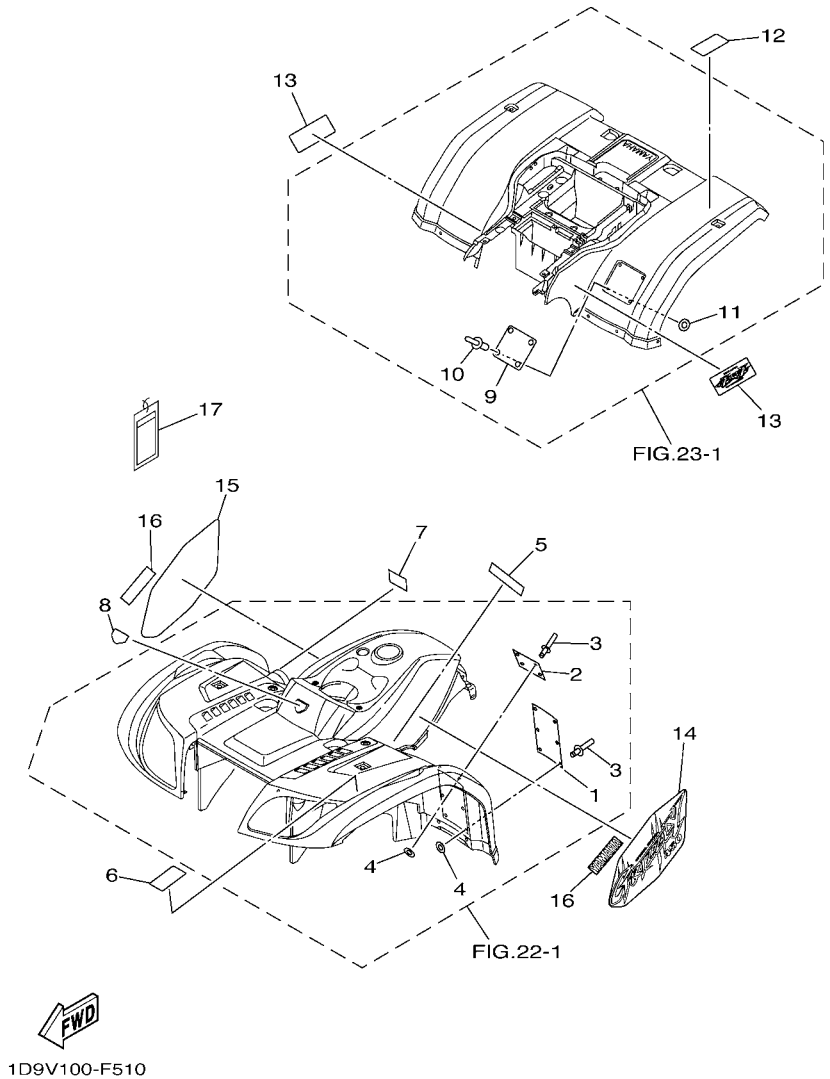

FIG. 51 EMBLEM & LABEL 1

REF. NO.	PART NO.	DESCRIPTION	USA	CAN	EUR			REMARKS
1	4XE–F1568–00	LABEL, WARNING	1					ENGLISH
2	4XE–F415A–00	LABEL, CAUTION	1					ENGLISH
3	4XE–F1539–10	RIVET	10					
4	4XE–F1549–00	WASHER, FENDER MOLD	10					
5	5ND–F151E–00	LABEL 2	1					ENGLISH
6	5ND–F4877–00	LABEL, CAUTION	1					ENGLISH
7	5ND–F1558–00	LABEL, WARNING 2	1					ENGLISH
8	3B4–26232–00	EMBLEM 3D	1					
9	5FU–F1696–00	LABEL, CAUTION	1					ENGLISH
10	4XE–F1539–10	RIVET	4					
11	4XE–F1549–00	WASHER, FENDER MOLD	4					
12	5ND–F4897–00	EMBLEM	1					ENGLISH
13	1D9–F163G–G0	EMBLEM 1	2					
14	1D9–F1781–H0	EMBLEM 1	1					
15	1D9–F1782–H0	EMBLEM 2	1					
16	5UH–F173B–00	EMBLEM 3D	2					
17	4XE–F819R–10	TAG, WARNING	1					

FIG. 52 EMBLEM & LABEL 2

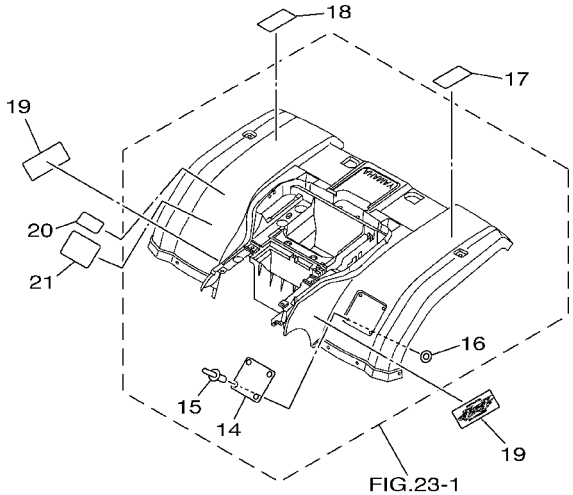

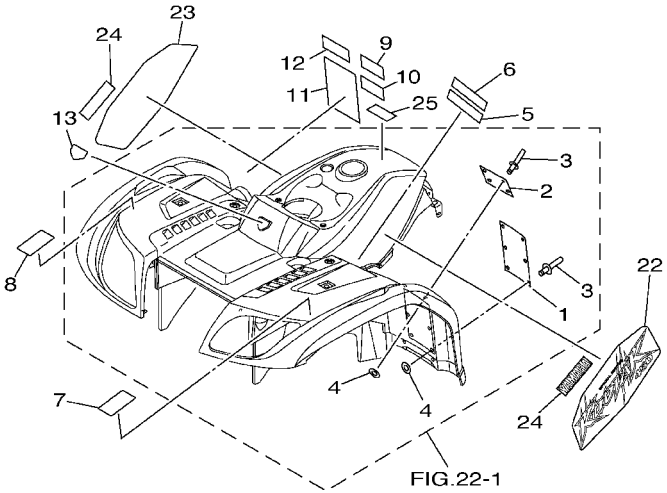

1D9V100-F521

REF. NO.	PART NO.	DESCRIPTION	USA	CAN	EUR			REMARKS
1	4XE–F1568–00	LABEL, WARNING		1				ENGLISH
2	4XE–F415A–00	LABEL, CAUTION		1				ENGLISH
3	4XE–F1539–10	RIVET		10				
4	4XE–F1549–00	WASHER, FENDER MOLD		10				
5	5ND–F151E–00	LABEL 2		1				ENGLISH
6	5ND–F151E–10	LABEL 2		1				FRENCH
7	5ND–F4877–00	LABEL, CAUTION		1				ENGLISH
8	5ND–F4877–10	LABEL, CAUTION		1				FRENCH
9	5ND–F1558–00	LABEL, WARNING 2		1				ENGLISH
10	5ND–F1558–10	LABEL, WARNING 2		1				FRENCH
11	4XE–F1568–20	LABEL, WARNING		1				FRENCH
12	4XE–F415A–10	LABEL, CAUTION		1				FRENCH
13	3B4–26232–00	EMBLEM 3D		1				
14	5FU–F1696–00	LABEL, CAUTION		1				ENGLISH
15	4XE–F1539–10	RIVET		4				
16	4XE–F1549–00	WASHER, FENDER MOLD		4				
17	5ND–F4897–00	EMBLEM		1				ENGLISH
18	5ND–F4897–10	EMBLEM		1				FRENCH
19	1D9–F163G–G0	EMBLEM 1		2				
20	4XE–F151H–10	LABEL 5		1				FRENCH
21	5FU–F1696–10	LABEL, CAUTION		1				FRENCH
22	1D9–F1781–K0	EMBLEM 1		1				
23	1D9–F1782–K0	EMBLEM 2		1				
24	5UH–F173B–00	EMBLEM 3D		2				
25	4XE–F416E–00	LABEL, CAUTION CANADA		1				

FIG. 53 EMBLEM & LABEL 3

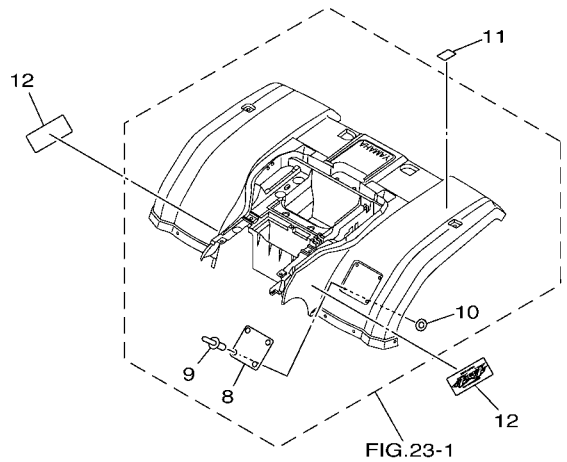

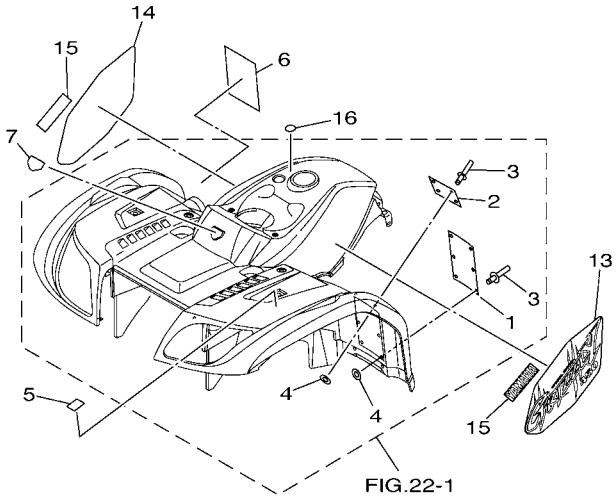

1D9V100-F530

REF. NO.	PART NO.	DESCRIPTION	USA	CAN	EUR			REMARKS
1	4XE–F1568–50	LABEL, WARNING			1			
2	4XE–F415A–20	LABEL, CAUTION			1			
3	4XE–F1539–10	RIVET			10			
4	4XE–F1549–00	WASHER, FENDER MOLD			10			
5	5ND–F4877–20	LABEL, CAUTION			1			ENGLISH
6	5ND–F1558–20	LABEL, WARNING 2			1			
7	3B4–26232–00	EMBLEM 3D			1			
8	5ND–F1696–00	LABEL, CAUTION			1			
9	4XE–F1539–10	RIVET			4			
10	4XE–F1549–00	WASHER, FENDER MOLD			4			
11	5ND–F4897–20	EMBLEM			1			ENGLISH
12	1D9–F163G–G0	EMBLEM 1			2			
13	1D9–F1781–H0	EMBLEM 1			1			
14	1D9–F1782–H0	EMBLEM 2			1			
15	5UH–F173B–00	EMBLEM 3D			2			
16	4XE–F415E–10	LABEL, CAUTION			1			

NUMERICAL INDEX

PART NO.	GRID NO.
5GH–11110–00	B – 2
5GH–1111F–00	B – 2
3Y1–11133–11	B – 2
4KB–11145–00	B – 6
4WU–11160–01	B – 2
4KB–11165–00	B – 2
5GH–11181–00	B – 2
2NL–11186–12	B – 2
214–11198–01	B – 14
	D – 8
	D – 12
5ND–11310–00	B – 3
5GH–11351–00	B – 3
5ND–11400–00	B – 4
5GH–11447–00	B – 4
5ND–11500–00	B – 4
5ND–11603–00	B – 4
5ND–11605–00	B – 4
5ND–11607–00	B – 4
5ND–11631–00	B – 4
3LD–11633–00	B – 4
5ND–11636–00	B – 4
5ND–11638–00	B – 4
5GH–11651–01	B – 4
5GH–11681–00	B – 4
5GH–12111–00	B – 5
22U–12113–00	B – 5
1UY–12114–01	B – 5
3Y1–12116–00	B – 5
3Y1–12117–01	B – 5
1J7–12118–00	B – 5
5GH–12121–00	B – 5
M01–12129–00	B – 5
3GD–12151–00	B – 5
3Y1–12156–00	B – 5
31G–12158–00	B – 5
31G–12159–02	B – 5
5GH–12171–00	B – 6
5GH–12176–10	B – 6
31G–12210–01	B – 6
3GD–12213–00	B – 6
31G–12214–00	B – 6
31G–12222–00	B – 6
5GH–12231–10	B – 6
5GH–12241–00	B – 6
2TV–12411–00	B – 8
5GH–12413–00	B – 8
5GH–12420–01	B – 7

PART NO.	GRID NO.
5GH–12421–01	B – 7
5GH–12422–00	B – 7
5GH–12428–00	B – 7
11H–12438–10	B – 7
5GH–12446–00	B – 8
5CG–12450–00	B – 7
5GH–12481–00	B – 8
5GH–12484–00	B – 8
4KB–13161–01	B – 9
3Y1–13310–01	B – 9
5GH–13314–00	B – 9
1UY–13316–00	B – 9
5GH–13324–00	B – 9
5GH–13325–00	B – 9
3GD–13329–00	B – 9
1UY–13336–00	B – 9
51Y–13411–00	B – 9
2XK–13416–00	B – 9
5GH–13440–20	B – 9
5GH–13586–00	B – 10
5GH–14103–01	B – 12
5ND–14105–00	B – 11
5GH–14105–10	B – 11
4SV–14107–20	B – 11
5UH–14107–20	B – 11
5GH–1410A–00	B – 11
5ND–1410A–00	B – 11
5DM–14112–00	B – 11
5DM–14141–40	B – 11
4KM–14142–17	B – 12
3H1–14147–00	B – 11
522–14161–00	B – 12
127–14186–00	B – 11
3FV–14191–00	B – 12
24W–14193–00	B – 10
4KB–14193–20	B – 11
5GH–14197–00	B – 12
3DM–14216–00	B – 12
4KM–14216–00	B – 11
3G2–14231–14	B – 11
1HX–14231–16	B – 11
3G2–1423E–52	B – 11
5GH–14261–00	B – 11
31A–14419–00	B – 10
5BF–1443E–00	C – 2
	D – 5
583–14561–00	B – 11
5DM–14561–00	B – 11

PART NO.	GRID NO.
1FN–14565–00	B – 12
3GD–14613–00	B – 13
5ND–1490H–00	B – 12
5ND–1490J–00	B – 11
5ND–1490J–10	B – 11
5GH–14918–00	B – 12
5GH–14918–10	B – 11
5DM–14933–00	B – 11
4XE–14937–00	B – 12
5GH–14937–00	B – 12
5GH–14940–10	B – 11
256–14956–01	B – 12
3H1–14962–00	B – 11
5DM–14985–00	B – 12
5ND–15100–02	B – 14
5GH–15113–00	C – 2
5GH–15163–00	B – 14
5GH–15317–00	C – 2
5GH–15333–00	B – 15
5GH–15336–00	C – 2
5GH–15338–00	B – 15
4HC–15351–00	B – 9
5KM–15351–00	C – 2
5GH–15362–00	B – 14
5UG–15371–00	D – 8
5GH–15379–00	C – 2
4WV–15381–00	B – 15
2K7–15383–00	B – 14
11H–15383–02	C – 10
5GH–15388–00	B – 14
5GH–15411–01	C – 2
5GH–15414–00	B – 14
5ND–15431–00	C – 2
5GH–15442–01	B – 15
5GH–15451–00	C – 2
5GH–15454–00	B – 14
5GH–15463–00	B – 14
5GH–15512–00	C – 5
5GH–15517–10	C – 5
4KB–15522–01	C – 5
1UY–15590–01	C – 5
5UH–15710–00	C – 4
5UH–15713–00	C – 4
24W–15714–00	C – 4
21V–15715–01	C – 4
5UH–15716–00	C – 4
21V–15719–00	C – 2
1UY–15723–00	C – 4

PART NO.	GRID NO.
21V–15741–00	C – 4
21V–15751–00	C – 4
3X3–15755–00	C – 4
21V–15767–00	C – 4
21V–15779–00	C – 4
5GH–16611–10	C – 6
5GH–16620–00	C – 6
5GH–16626–00	C – 6
5GH–16664–00	C – 6
5GH–17223–00	C – 8
5GH–17233–11	C – 8
1D9–17285–00	C – 8
1D9–17286–00	C – 8
5GH–17402–01	C – 8
5GH–17453–10	C – 8
5GH–17473–00	C – 8
5GH–17521–00	C – 10
5ND–17523–00	C – 8
4VR–17527–00	C – 11
4WV–17530–00	C – 10
5GH–17531–00	C – 10
52G–17531–01	C – 10
5GH–17531–10	C – 10
52G–17531–11	C – 10
5GH–17531–20	C – 10
52G–17531–21	C – 10
5GH–17531–30	C – 10
52G–17531–31	C – 10
5GH–17531–40	C – 10
52G–17531–41	C – 10
5GH–17531–50	C – 11
52G–17531–51	C – 10
5GH–17531–60	C – 11
5GH–17551–00	C – 10
1D9–17556–00	C – 10
5KM–17576–00	C – 11
5GH–17582–00	C – 8
5GH–17583–00	C – 8
5UH–17585–00	C – 11
5GH–17606–00	C – 6
5UH–17611–00	C – 6
1D9–1761A–00	C – 11
5GH–17620–00	C – 6
5GH–17623–00	C – 6
5GH–17632–00	C – 6
5GH–17639–00	C – 6
5GH–17641–10	C – 6
4WV–17644–00	C – 7

PART NO.	GRID NO.
4WV–17653–00	C – 6
4WV–17654–01	C – 6
5GH–17660–10	C – 6
4CW–17664–00	C – 7
5GH–17670–00	C – 6
5GH–17681–11	C – 8
4WV–17684–00	C – 7
5GH–18104–00	C – 13
5GH–18115–01	C – 13
5GH–18129–01	C – 13
5GH–1812E–00	C – 12
5GH–18131–00	C – 13
5GH–18146–00	C – 13
5GH–18148–00	C – 12
1KT–18157–00	C – 13
5GH–18174–00	C – 13
5KM–18191–00	C – 13
5GH–18197–00	C – 13
4SH–18198–00	C – 13
5GH–18300–02	C – 13
5KM–18319–00	D – 11
1D9–18511–00	C – 12
1D9–18512–00	C – 12
5KM–18514–00	D – 11
4KB–18531–01	C – 12
5ND–18540–00	C – 12
5GH–18617–00	C – 13
1D9–2177C–10	B – 10
1AA–21815–00	D – 6
1AA–21874–00	D – 6
5KM–22149–00	D – 7
	D – 15
5KM–23448–00	E – 10
2NL–23517–00	E – 10
2HR–23526–00	D – 15
5KM–23526–00	D – 7
1UY–23812–00	E – 2
8K1–23814–00	E – 2
5KM–2385L–01	D – 14
5KM–2385M–01	D – 14
2GU–23872–00	C – 15
5GH–24260–00	E – 3
4SH–24261–00	E – 3
5GH–24500–01	E – 3
4X8–24512–00	E – 3
3AC–24523–00	E – 3
5GH–24524–00	E – 3
3AJ–24534–01	E – 3

PART NO.	GRID NO.
5KM–24610–00	E – 3
5KM–2482H–01	F – 3
5KM–2510G–00	E – 5
5KM–2510H–00	E – 5
5KM–2510J–00	E – 5
5KM–2510J–10	E – 6
3HN–2511G–01	E – 5
	E – 9
4KB–2511H–00	E – 5
	E – 9
5GT–2512A–00	E – 5
	E – 10
3HN–2512G–01	E – 5
	E – 9
4KB–2512H–00	E – 5
	E – 9
2HR–2512J–00	E – 5
	E – 9
5KM–2530X–11	E – 9
5KM–2530Y–10	E – 9
5KM–2536E–10	E – 9
3GD–2580T–00	E – 8
3GD–2580U–00	E – 8
1D9–2580V–01	E – 11
3GD–25827–00	E – 8
5UG–25827–00	E – 11
3GD–25828–00	E – 8
5GH–25828–00	E – 11
31A–2582A–50	E – 15
5KM–2583T–01	E – 13
5KM–2583V–00	E – 15
5GH–25844–00	E – 15
4PX–25852–00	E – 15
5JX–25852–01	E – 13
2VN–25854–00	E – 15
4L0–25854–00	E – 13
2VN–25855–00	E – 15
2GU–25866–00	E – 13
5GH–25867–00	E – 13
2VN–25894–00	E – 15
1FK–2589F–00	E – 13
3GM–2589H–00	E – 15
4GY–25919–50	E – 11
5GH–25924–00	E – 11
3GD–25933–00	E – 8
1NV–26129–00	E – 12
3B4–26232–00	F – 15
	G – 2

NUMERICAL INDEX

PART NO.	GRID NO.
3B4–26232–00	G – 3
5KM–26250–00	E – 12
1NV–2625G–01	E – 12
1NV–2625K–00	E – 12
4KB–2628F–10	E – 12
4KB–2628G–00	E – 12
1NV–26304–00	E – 12
5GH–26311–01	E – 12
5EB–26332–00	E – 13
5GH–26341–01	E – 15
5GH–2637F–00	F – 2
1NV–26398–00	E – 12
4SS–27218–00	E – 15
2YK–27222–00	E – 15
1NV–2811A–01	D – 2
5KM–42752–00	D – 11
1D9–44583–00	D – 8
5KM–45531–10	E – 5
1D9–46107–00	D – 10
5KM–46107–00	D – 12
1D9–46108–00	D – 8
4WV–46119–01	D – 11
5KM–46119–01	D – 12
4WV–46119–11	D – 11
5KM–46119–11	D – 12
4WV–46119–21	D – 11
5KM–46119–21	D – 12
4WV–46119–31	D – 11
5KM–46119–31	D – 12
4WV–46119–41	D – 11
5KM–46119–41	D – 12
4WV–46119–51	D – 11
5KM–46119–51	D – 12
5KM–46119–61	D – 12
5GT–46136–00	D – 10
	D – 13
5GT–46137–00	D – 13
5KM–46141–13	D – 11
5KM–46143–00	D – 11
4WV–46145–10	D – 11
5KM–46146–11	D – 11
5KM–46155–00	D – 11
2HR–46156–00	D – 8
4WV–46159–00	D – 11
5KM–46160–06	D – 11
5KM–46161–00	D – 11
5KM–46162–00	D – 11
4WV–46167–00	D – 12

PART NO.	GRID NO.
5KM–4616A–02	D – 11
1D9–46186–00	D – 8
5GT–46187–00	D – 8
	D – 12
1D9–461A0–00	D – 8
5KM–46441–00	D – 11
5KM–46451–00	D – 12
5KM–46470–12	D – 11
5ND–81410–00	F – 4
5GH–81450–01	F – 4
3AJ–81801–00	F – 5
5ND–81815–01	F – 5
3AJ–81826–00	F – 5
4XV–8182A–00	F – 5
11H–81844–00	F – 5
1FK–81847–00	F – 5
5KM–81890–00	F – 5
4SV–81940–12	F – 11
5DM–81950–00	F – 12
29U–81950–93	F – 12
5GT–81960–00	F – 11
371–82121–00	F – 11
1AE–82151–00	F – 12
5JJ–82151–10	F – 12
5JJ–82151–30	F – 12
5JJ–82151–50	F – 12
5ND–82180–00	F – 12
5ND–82309–00	F – 12
3KJ–82310–10	F – 11
1UY–82370–20	F – 11
5KM–82509–10	F – 12
5ND–82510–00	F – 12
4KB–82530–10	F – 12
3GB–82540–01	F – 11
5ND–82541–00	F – 11
5KM–82560–00	F – 11
5ND–82560–00	F – 12
5ND–82560–10	F – 11
3HN–82569–00	F – 12
3HN–82579–00	F – 12
1D9–82590–00	F – 12
1D9–82590–10	F – 12
1YW–82911–02	F – 10
2XJ–82913–00	F – 10
4V4–82913–00	E – 12
5KM–82917–00	F – 10
4WV–83371–00	F – 13
5ND–83500–20	F – 6

PART NO.	GRID NO.
5ND–83500–30	F – 6
5ND–83755–01	F – 11
1UY–83909–00	F – 10
2HT–83912–00	F – 10
5KM–83922–00	E – 13
5KM–83941–00	F – 10
3L4–83943–00	F – 10
5KM–83972–00	F – 10
1C5–83976–00	F – 10
5KM–83976–00	E – 12
5LP–83980–00	E – 13
4KB–84314–01	F – 7
5KM–84320–01	F – 7
2GU–84332–00	F – 7
2GU–84334–00	F – 7
5EH–84340–00	F – 7
5KM–84710–00	F – 8
	F – 9
1A2–84714–41	F – 8
	F – 9
5KM–8472C–10	F – 8
	F – 9
5GH–84751–10	F – 9
2EK–85111–00	F – 14
3Y6–85130–02	F – 14
449–85131–02	F – 14
5ND–85540–10	F – 11
3C2–E1166–00	B – 2
5ND–E2405–01	B – 8
5ND–E240A–01	B – 8
5ND–E2460–01	B – 8
5ND–E2462–00	B – 8
5ND–E2482–00	B – 8
5ND–E2483–00	B – 8
5ND–E2535–00	B – 8
5ND–E2675–00	B – 8
5ND–E4101–00	B – 11
5ND–E4101–11	B – 11
5FU–E4147–00	B – 12
5FU–E4155–00	B – 12
5ND–E4191–00	C – 13
5UH–E4191–00	B – 10
5ND–E4349–00	B – 10
5UH–E4411–00	B – 10
5UH–E4412–00	B – 10
5UH–E4424–00	B – 10
5ND–E442F–00	B – 10
5ND–E4437–02	B – 10

PART NO.	GRID NO.
5UH–E4438–00	B – 10
5UH–E4451–10	B – 10
5ND–E4453–00	B – 10
5UH–E4458–00	B – 10
5UH–E4462–00	B – 10
5UH–E4468–00	B – 10
5ND–E4611–00	B – 13
5ND–E4628–00	B – 13
5ND–E4711–00	B – 13
5ND–E4714–00	B – 13
5ND–E4715–00	B – 13
5ND–E4718–00	B – 13
5ND–E4719–00	B – 13
5ND–E4728–00	B – 13
5ND–E4737–00	B – 13
5ND–E4752–00	B – 13
5ND–E4759–00	B – 13
5UH–E4769–10	B – 10
5ND–E4777–00	B – 13
5ND–E477K–01	B – 13
5ND–E4788–00	B – 13
1D9–E5336–00	D – 2
5ND–E5336–00	C – 15
5ND–E5413–00	C – 3
5ND–E5423–00	C – 3
5ND–E5434–00	C – 2
5ND–E5471–00	C – 2
5ND–E5472–00	C – 2
1D9–E5473–00	C – 2
1D9–E5474–00	C – 3
1D9–F1110–00	C – 15
1D9–F111B–00	C – 15
5ND–F1315–00	C – 15
5ND–F1316–00	C – 15
5ND–F1446–00	D – 2
5ND–F147A–02	D – 2
5ND–F1486–00	C – 15
5ND–F1488–00	C – 15
1D9–F1500–H1	D – 4
1D9–F1500–J1	D – 4
1D9–F1500–K1	D – 4
5ND–F1513–00	D – 2
5ND–F151E–00	F – 15
	G – 2
5ND–F151E–10	G – 2
4XE–F151H–10	G – 2
5ND–F151K–00	D – 2
5ND–F151K–10	D – 2

PART NO.	GRID NO.
4XE–F1539–10	F – 15
	G – 2
	G – 3
4XE–F1549–00	F – 15
	G – 2
	G – 3
5ND–F1558–00	F – 15
	G – 2
5ND–F1558–10	G – 2
5ND–F1558–20	G – 3
4XE–F1568–00	F – 15
	G – 2
4XE–F1568–20	G – 2
4XE–F1568–50	G – 3
5ND–F1575–00	D – 4
5ND–F1585–01	D – 2
5ND–F1600–L1	D – 5
5ND–F1600–M1	D – 5
5ND–F163A–02	D – 5
5ND–F163E–00	D – 5
5ND–F163F–00	D – 5
1D9–F163G–G0	F – 15
	G – 2
	G – 3
5ND–F1652–00	D – 5
5FU–F1696–00	F – 15
	G – 2
5ND–F1696–00	G – 3
5FU–F1696–10	G – 2
5ND–F1710–B0	D – 6
5ND–F171C–B0	D – 6
5ND–F1720–B0	D – 6
5UH–F173B–00	F – 15
	G – 2
	G – 3
5ND–F174A–01	D – 6
5ND–F174M–00	D – 6
5ND–F174T–01	D – 6
5FU–F175B–01	D – 4
1D9–F1781–H0	F – 15
	G – 2
	G – 3
1D9–F1782–H0	F – 15
	G – 2
	G – 3
5ND–F1871–00	D – 6
5ND–F2123–00	D – 2
1D9–F2171–00	D – 7

PART NO.	GRID NO.
1D9–F2172–00	D – 7
1D9–F217M–00	D – 7
1D9–F217N–00	D – 7
1D9–F2210–21	D – 14
5ND–F2825–00	D – 2
5ND–F3123–00	D – 15
5ND–F3192–00	E – 13
1D9–F3350–20	D – 15
5ND–F3391–10	D – 4
1D9–F3501–02	E – 5
1D9–F3502–02	E – 6
5ND–F3540–12	D – 15
5FU–F3549–00	D – 15
	E – 5
5ND–F3550–12	D – 15
1D9–F357A–00	D – 15
1D9–F358A–00	D – 15
5ND–F3813–10	E – 2
5ND–F3816–11	E – 2
5ND–F3831–00	E – 2
4XE–F3833–00	E – 2
4XE–F3834–00	E – 2
1D9–F3841–01	E – 2
1D9–F3845–01	E – 2
5ND–F3868–00	E – 2
1D9–F386G–00	D – 14
1D9–F386H–00	D – 14
4XE–F3894–00	E – 2
5ND–F4110–00	E – 3
5ND–F414H–10	E – 3
4XE–F415A–00	F – 15
	G – 2
4XE–F415A–10	G – 2
4XE–F415A–20	G – 3
4XE–F415E–10	G – 3
4XE–F416E–00	G – 2
3C2–F4311–00	E – 3
5ND–F470F–30	E – 4
5ND–F470F–40	E – 4
1D9–F4710–11	E – 4
1D9–F4710–31	E – 4
4XE–F4747–00	E – 4
5ND–F4776–00	E – 4
4XE–F478V–00	E – 4
5ND–F4841–01	F – 3
5ND–F4842–00	F – 3
5ND–F4842–10	F – 3
5ND–F4877–00	F – 15

NUMERICAL INDEX

PART NO.	GRID NO.
5ND–F4877–00	G – 2
5ND–F4877–10	G – 2
5ND–F4877–20	G – 3
5ND–F4897–00	F – 15
	G – 2
5ND–F4897–10	G – 2
5ND–F4897–20	G – 3
1D9–F510F–00	E – 9
5ND–F510F–00	E – 5
1D9–F510J–01	E – 9
5ND–F5111–20	E – 5
1D9–F514A–00	E – 7
1D9–F5180–20	E – 5
5ND–F518F–00	E – 5
5ND–F518G–00	E – 6
1D9–F530F–01	E – 9
1D9–F5311–00	E – 9
1D9–F531H–03	E – 9
1D9–F532E–00	E – 9
1D9–F532F–01	E – 10
1D9–F5390–20	E – 9
1D9–F5718–00	E – 10
1D9–F581J–00	E – 15
5ND–F582T–00	E – 8
1D9–F5831–00	E – 11
1D9–F584B–00	E – 15
5ND–F5871–00	E – 13
5ND–F5872–00	E – 13
1D9–F5873–00	E – 13
1D9–F5875–00	E – 13
5ND–F5895–00	E – 15
5FU–F6111–10	E – 12
5ND–F6124–00	E – 12
5FU–F6241–10	E – 12
5VH–F6331–00	E – 12
5ND–F637G–00	E – 15
5ND–F7211–00	E – 14
5ND–F7252–10	E – 14
5ND–F7254–10	E – 14
5ND–F7412–10	E – 14
5UH–F741A–00	E – 14
5ND–F7445–00	E – 14
5ND–F7453–01	E – 14
5ND–F7463–01	E – 14
5ND–F7471–01	E – 14
5ND–F7491–00	F – 2
5ND–F8100–00	D – 2
4XE–F819R–10	F – 15

PART NO.	GRID NO.
1D9–F8309–01	D – 4
1D9–F8309–11	D – 4
5UH–F8349–00	D – 4
5ND–F837L–01	D – 4
1D9–F840K–01	D – 3
1D9–F8415–00	F – 3
1D9–F8416–00	F – 3
1D9–F845N–01	F – 3
1D9–F8488–00	D – 2
1D9–G6101–00	D – 8
4XE–G6117–25	D – 9
4XE–G6117–30	D – 9
4XE–G6117–35	D – 9
4XE–G6117–40	D – 9
4XE–G6117–45	D – 9
4XE–G6117–50	D – 9
4XE–G6118–10	D – 9
4XE–G6118–11	D – 9
4XE–G6118–12	D – 9
4XE–G6118–13	D – 9
4XE–G6118–14	D – 9
4XE–G6118–15	D – 9
4XE–G6118–16	D – 9
4XE–G6118–17	D – 9
4XE–G6118–18	D – 9
4XE–G6118–19	D – 9
4XE–G6118–20	D – 9
4XE–G6118–21	D – 9
1D9–G6119–00	D – 9
1D9–G6119–10	D – 9
1D9–G6119–20	D – 9
1D9–G6119–30	D – 9
1D9–G6119–40	D – 9
1D9–G6151–00	D – 8
1D9–G6152–00	D – 8
5ND–G6173–00	D – 13
1D9–G7491–00	D – 14
5FU–H191B–10	F – 13
5FU–H1920–10	F – 13
5FU–H1925–10	F – 13
5FU–H1942–10	F – 13
5FU–H2100–20	F – 11
5ND–H2115–00	F – 11
5ND–H2116–00	F – 11
5ND–H2119–00	F – 11
5ND–H2128–00	F – 11
5FU–H2599–01	F – 13
5ND–H3519–00	F – 6

PART NO.	GRID NO.
8CR–W0041–00	E – 13
5KM–W0042–50	E – 15
3GD–W0045–00	E – 8
1D9–W0046–00	E – 11
3GD–W0047–00	E – 8
	E – 11
1UY–W0048–50	E – 8
	E – 11
3GD–W0057–00	E – 8
3TB–W0057–00	E – 11
5ND–W1141–00	B – 4
5ND–W1142–00	B – 4
90101–10303	B – 6
90101–10568	B – 4
90105–06086	B – 7
90105–06690	E – 15
90105–08520	E – 8
90105–088B2	E – 11
90105–10051	C – 15
90105–10055	C – 15
90105–10095	D – 14
90105–10111	D – 10
90105–10323	D – 7
90105–10421	B – 2
90105–10422	B – 2
90105–10480	E – 10
90105–10669	D – 2
90105–10711	D – 2
90105–10890	D – 15
90105–108B1	D – 14
	D – 15
90105–12660	D – 2
90105–14003	C – 12
90109–06072	E – 14
90109–063F1	D – 2
90109–06723	F – 11
90109–06799	F – 10
90110–05201	D – 6
90110–06001	F – 11
90110–06037	C – 4
90110–06136	B – 8
90113–08004	D – 11
90114–10010	E – 5
	E – 9
90119–06060	D – 4
	D – 5
	D – 6
90119–06079	D – 6

PART NO.	GRID NO.
90119–06227	D – 5
90119–06831	E – 3
90123–08046	F – 10
90149–04278	E – 12
90149–05299	E – 14
90149–06011	E – 3
90149–06280	E – 10
90149–08152	C – 10
90149–08268	E – 8
	E – 11
90150–05802	F – 7
90151–05023	C – 2
90151–06014	B – 14
90153–06029	B – 3
90157–04088	C – 6
90170–08358	C – 13
90170–14284	B – 9
90170–36279	C – 7
90171–12816	D – 15
	E – 2
90171–16001	E – 6
90179–08148	F – 10
90179–08410	B – 13
90179–10540	E – 5
	E – 9
90179–16001	C – 6
90179–20006	E – 10
90179–22005	C – 6
90179–22015	C – 10
90179–55660	C – 11
90179–65305	C – 10
90183–05008	F – 7
90183–05024	D – 6
90183–06053	D – 2
	D – 4
	D – 15
90185–10844	D – 7
	D – 14
	D – 15
	E – 10
90185–14009	C – 10
90185–14070	C – 11
	D – 8
	E – 2
90201–047R9	C – 6
90201–05029	E – 14
90201–06008	C – 13
90201–06042	F – 2

PART NO.	GRID NO.
90201–06060	C – 12
90201–06074	F – 8
	F – 9
90201–060L5	E – 3
90201–08083	E – 15
90201–08085	B – 10
90201–08087	D – 8
90201–10118	E – 13
	E – 15
90201–10128	B – 2
90201–10131	D – 10
90201–101J1	C – 15
90201–10321	B – 4
90201–10591	B – 6
90201–106E0	B – 13
90201–114P2	B – 9
90201–123K4	C – 5
90201–132G5	C – 13
90201–14226	E – 2
90201–144J2	E – 14
90201–14633	C – 10
	D – 8
90201–15564	C – 12
90201–168R1	E – 5
90201–190T7	C – 6
90201–20266	D – 13
90201–20278	C – 8
90201–250R9	C – 8
90201–25291	C – 5
90201–356K1	B – 4
90202–05193	E – 3
90209–06174	B – 8
90215–06003	B – 2
90215–14205	B – 9
90240–06076	F – 2
90240–08013	E – 15
90267–489U9	E – 14
90269–05055	C – 13
90269–06800	D – 4
	F – 6
90269–06804	D – 4
90269–08813	C – 3
90280–05048	B – 4
90282–05013	B – 9
90336–28053	E – 2
90338–08226	F – 11
90338–09801	D – 5
90340–10001	D – 12

PART NO.	GRID NO.
90340–14002	B – 14
90340–14029	B – 14
	D – 8
	D – 12
90340–14046	D – 8
90340–14117	C – 2
90340–18101	B – 14
90381–17067	E – 10
90387–060A7	B – 8
90387–0613B	C – 13
90387–06681	D – 2
90387–066J1	E – 3
90387–07598	E – 3
90387–090R0	E – 2
90387–10636	B – 13
90387–16547	B – 3
90387–1914K	C – 6
90387–26001	C – 8
90387–30008	E – 5
90401–06001	B – 2
90401–08038	B – 9
90401–10159	E – 13
	E – 15
90401–20145	B – 9
90430–06014	B – 3
	B – 7
90430–06192	B – 2
90430–08119	B – 9
90430–10003	D – 12
90430–10148	F – 11
90430–14194	C – 12
90430–14240	B – 2
90430–18130	B – 14
90445–07809	D – 12
90445–078C4	D – 10
90445–08811	D – 6
90445–08812	D – 6
90445–088C5	E – 3
90446–06001	B – 7
90446–16001	C – 13
90450–32015	B – 8
90450–47001	B – 10
90450–56006	B – 10
90450–58002	B – 10
90450–64002	C – 3
90462–06016	F – 11
90464–10833	F – 13
90464–12830	F – 12

PART NO.	GRID NO.
90464–16006	F – 13
90464–19815	F – 12
90464–25800	F – 12
90464–31827	F – 12
90464–38800	F – 13
90464–40825	F – 12
90464–48800	F – 13
90464–51800	F – 12
90465–08127	C – 2
90465–08336	C – 13
90467–06194	B – 7
90467–07029	D – 10
	D – 12
90467–08003	D – 6
90467–10008	E – 3
90467–11044	E – 15
90467–14057	E – 15
90467–140A4	B – 2
90467–15012	C – 14
90467–16195	C – 2
	D – 5
90467–25800	B – 8
90480–01400	E – 3
90480–13018	C – 2
90480–13398	C – 3
90480–13567	D – 6
90480–15235	B – 8
90480–18290	E – 3
90501–10353	C – 12
90501–130A1	C – 12
90501–166L4	C – 12
90501–18576	B – 9
90501–235L9	D – 13
90501–626L9	C – 7
90501–650L5	C – 11
90506–12441	E – 14
90508–235B7	C – 12
90508–35764	C – 13
91317–05012	F – 4
91317–06012	B – 8
91317–06020	B – 2
	B – 8
91317–06025	B – 2
91317–06140	B – 2
91317–08016	C – 5
91317–08020	D – 11
91317–08025	B – 10
91401–16012	E – 15

PART NO.	GRID NO.
91401–20012	F – 2
91401–20025	E – 2
91401–25020	D – 15
	E – 2
91401–30030	E – 6
91810–20001	B – 15
91A20–07010	B – 10
92902–04100	B – 12
92907–04600	B – 12
	E – 12
92907–05100	F – 10
92907–05200	F – 14
92907–05600	E – 12
92907–06100	F – 10
92907–06600	B – 6
	B – 15
	F – 4
	F – 11
92907–08600	C – 11
93101–10090	B – 7
93101–12168	B – 15
93101–31167	C – 6
93102–15212	C – 12
93102–24034	D – 11
93102–25081	C – 15
93102–25099	C – 15
93102–28476	C – 2
93102–30170	C – 11
93102–32483	B – 14
93102–35012	C – 10
93102–42004	C – 8
93102–44454	C – 11
	D – 8
93102–60800	D – 8
93104–09025	E – 12
93104–41119	C – 6
93105–46001	D – 11
93106–38046	E – 5
93106–38047	E – 5
93112–31011	E – 2
93210–09165	B – 5
93210–11073	C – 13
93210–14359	D – 11
93210–14369	C – 2
93210–15620	E – 15
93210–16290	B – 4
93210–18322	B – 3
93210–18417	B – 8

PART NO.	GRID NO.
93210–19026	B – 14
93210–26001	C – 8
93210–27666	E – 5
93210–33133	B – 7
93210–33786	B – 8
93210–35520	B – 9
93210–44545	B – 10
	C – 7
93210–57634	B – 2
93210–626A7	D – 8
93210–64297	D – 2
93210–78544	C – 10
93210–82001	D – 11
93210–89447	B – 3
93211–06635	B – 2
93211–39569	D – 8
93211–40040	D – 12
93211–52001	C – 6
93305–005Y0	D – 8
93305–00602	E – 9
93306–00006	B – 7
93306–00208	C – 12
93306–00415	C – 8
93306–00438	B – 6
93306–00515	B – 6
93306–00612	C – 11
93306–006Y2	E – 5
93306–00709	D – 12
93306–07801	C – 2
93306–20120	B – 15
93306–203YN	C – 15
93306–20464	C – 8
93306–20582	C – 11
93306–20601	C – 8
93306–20622	C – 10
93306–20715	C – 10
93306–30201	C – 8
93306–30315	B – 4
93306–30438	B – 4
93306–30538	C – 10
93306–30629	B – 4
93306–91201	D – 12
93310–212R6	C – 5
93310–32590	C – 8
93310–420F2	C – 8
93310–635D4	B – 4
93311–42077	C – 9
93315–21813	C – 6

PART NO.	GRID NO.
93316–00702	D – 12
93316–01003	B – 14
93316–013Y0	D – 8
93317–855Y9	D – 8
93399–99948	D – 8
	D – 12
93410–20038	C – 8
93410–32826	D – 15
	E – 5
93410–46079	C – 6
93430–10015	E – 14
93440–12052	B – 2
93440–20088	D – 8
	D – 12
93440–25084	C – 8
93450–22027	B – 4
93450–22119	E – 6
93450–24062	C – 6
93503–08007	C – 12
93603–07073	B – 9
93603–12030	B – 9
93604–10011	B – 6
93700–06009	E – 9
93900–00813	E – 5
	E – 9
94108–12812	E – 5
94110–12809	E – 9
94582–20116	B – 6
94591–54038	C – 8
94701–00333	B – 2
95022–06012	B – 2
	B – 7
95027–06012	B – 15
95027–06014	C – 3
	C – 12
95027–06016	C – 12
95027–06025	B – 6
95027–06030	C – 2
	F – 5
95027–06035	C – 3
95027–06040	B – 14
	C – 2
95027–06050	B – 7
95027–06060	B – 7
95027–06065	B – 14
9502P–06008	F – 12
95307–05600	F – 14
95307–05700	E – 12

PART NO.	GRID NO.
95307–08700	C – 13
95606–06100	E – 13
95607–05100	E – 12
95607–06100	F – 10
95607–10200	C – 15
	D – 10
	D – 14
95607–12200	D – 2
95617–08620	B – 2
95702–06500	C – 4
95707–05300	E – 14
95707–05500	F – 6
95707–06300	F – 8
	F – 9
95707–08500	D – 9
95807–06012	D – 15
95807–06014	C – 3
95807–06020	B – 8
	F – 11
95807–06025	E – 13
95817–06010	D – 2
95817–06012	D – 2
	F – 13
95817–06016	C – 13
95817–06035	C – 13
95817–08012	D – 14
95817–08025	E – 15
95817–08030	C – 10
95817–10025	C – 15
	D – 9
95817–10080	C – 15
95817–10110	C – 15
9581P–06008	B – 13
9581P–06016	B – 13
9581P–08012	C – 15
	E – 14
	F – 3
9581P–08030	E – 2
95827–06012	B – 14
95827–06035	C – 2
95827–06045	C – 2
95827–08020	D – 2
95827–10040	B – 13
9582P–06012	E – 7
	E – 13
	F – 2
97007–06020	F – 11
97017–06012	B – 2

PART NO.	GRID NO.
97017–06016	B – 15
97017–06025	E – 15
97027–06016	B – 6
97027–08030	C – 11
9702P–08060	E – 2
97080–06020	C – 13
9752P–08525	D – 9
97707–60016	F – 3
	F – 11
97707–60420	F – 11
98501–04014	B – 12
98507–03014	E – 3
98507–03540	F – 7
98507–04008	B – 12
98507–04014	B – 12
98507–04016	E – 12
98507–05020	E – 12
98507–05030	F – 10
98507–06020	F – 10
98507–06030	F – 4
9850L–04006	B – 12
98517–05012	F – 10
98580–04010	B – 11
98702–06020	B – 9
98706–04012	E – 13
98707–04018	E – 3
98707–06020	B – 14
98707–06030	B – 9
99009–10400	B – 7
99009–11400	B – 9
99009–12400	C – 5
99009–19400	D – 13
99009–55500	E – 9
99009–80500	B – 14
99530–10114	B – 14
	C – 2
99530–14016	B – 2
	B – 3